BACK

Base poltrona
Chair base

Tav/Dwg 01_01

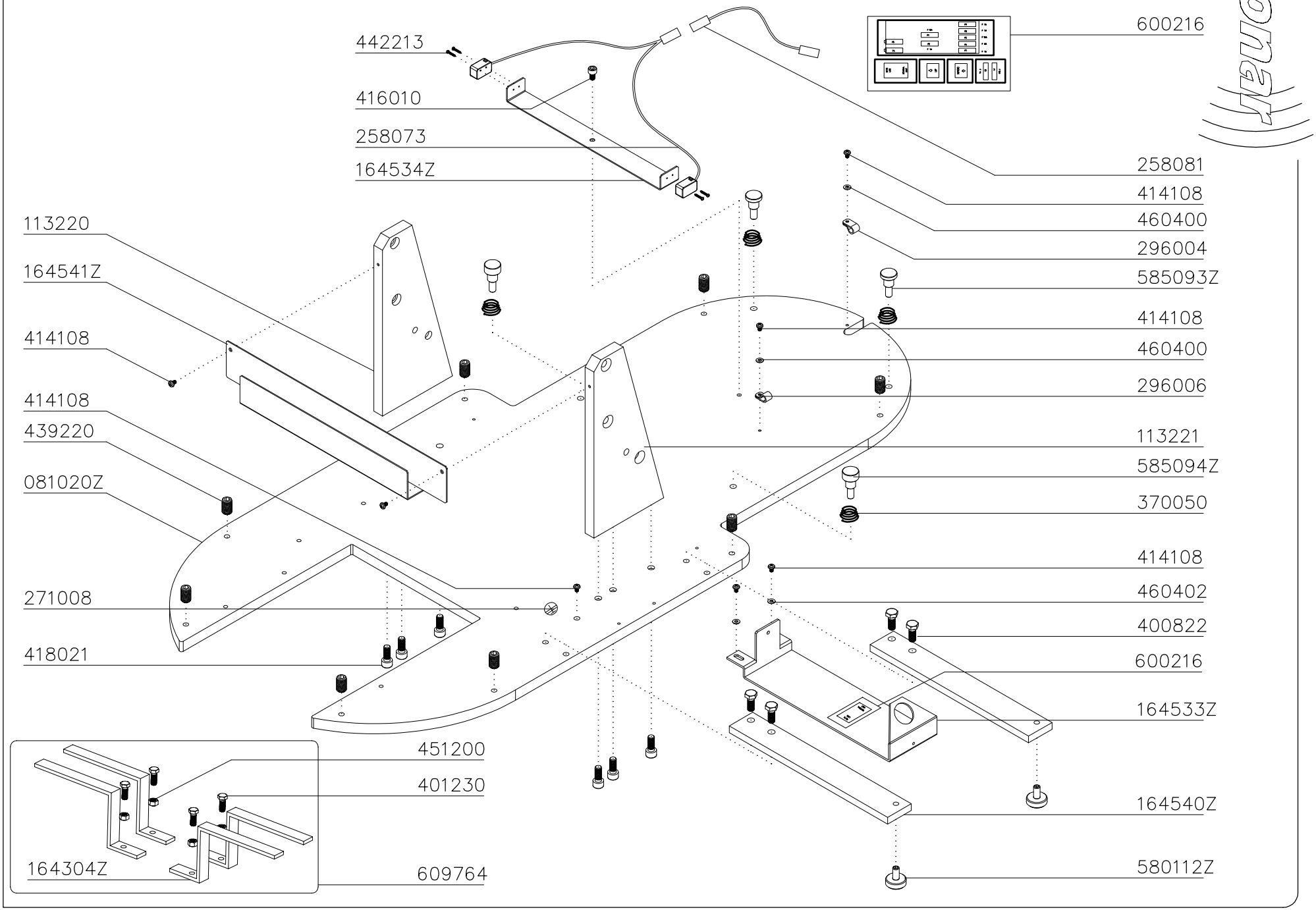

BACK

Gruppo elettrico
Electric unit

Tav/Dwg 01_02

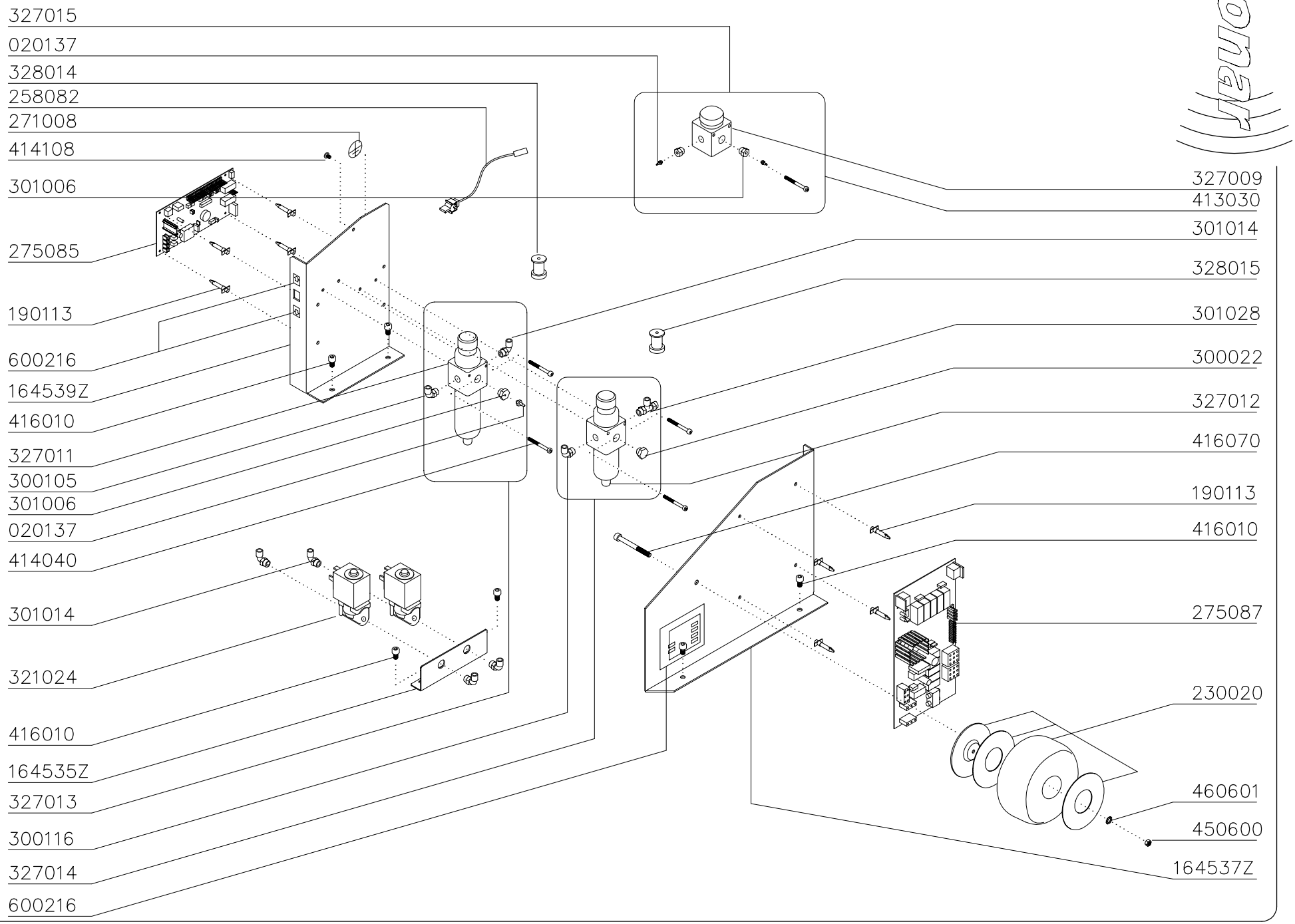

BACK

Gruppo telai paralleli

Parallel frame group

Tav/Dwg 01_03

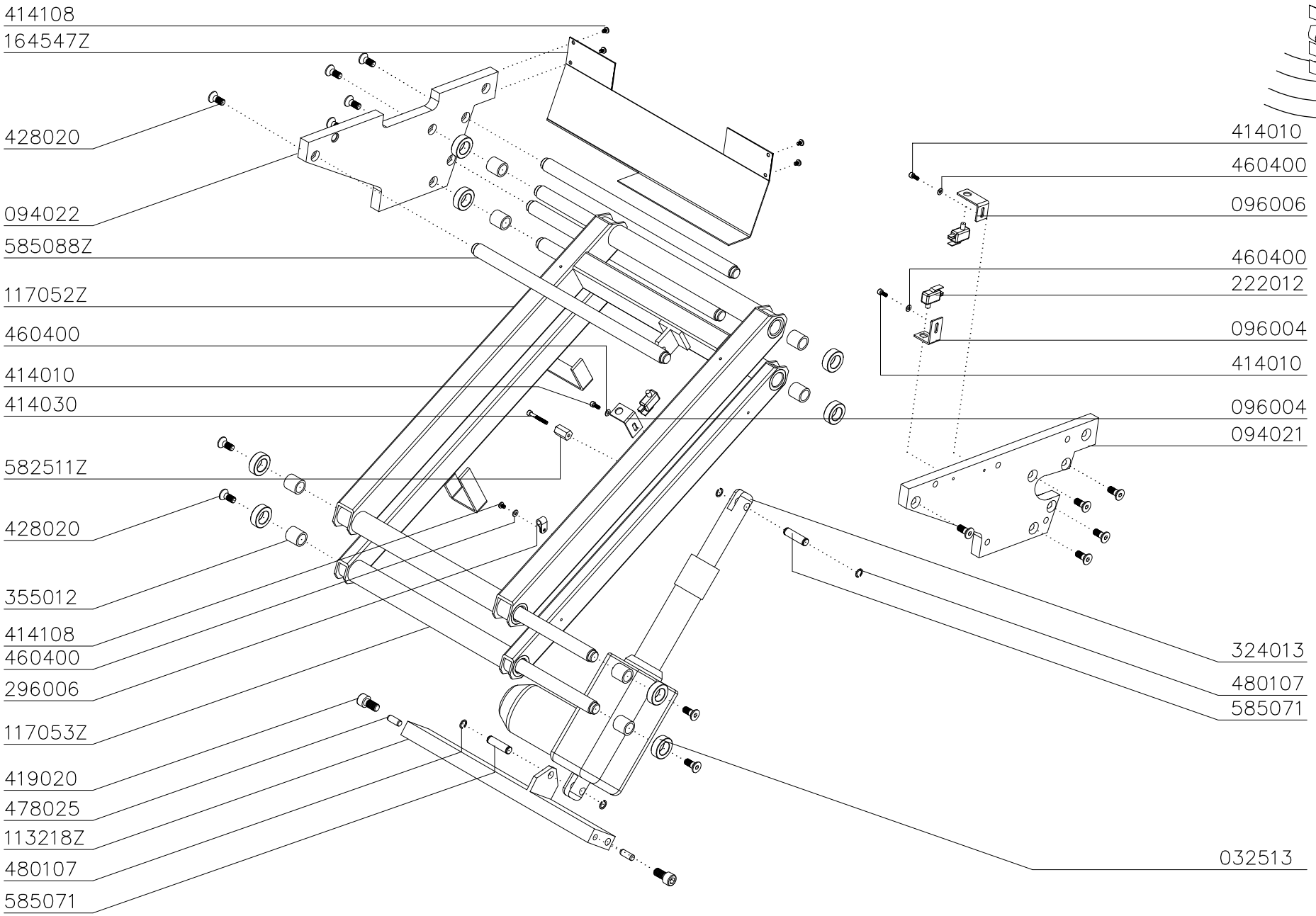

BACK

Gruppo per slitta
Slide unit

Tav/Dwg 01_04

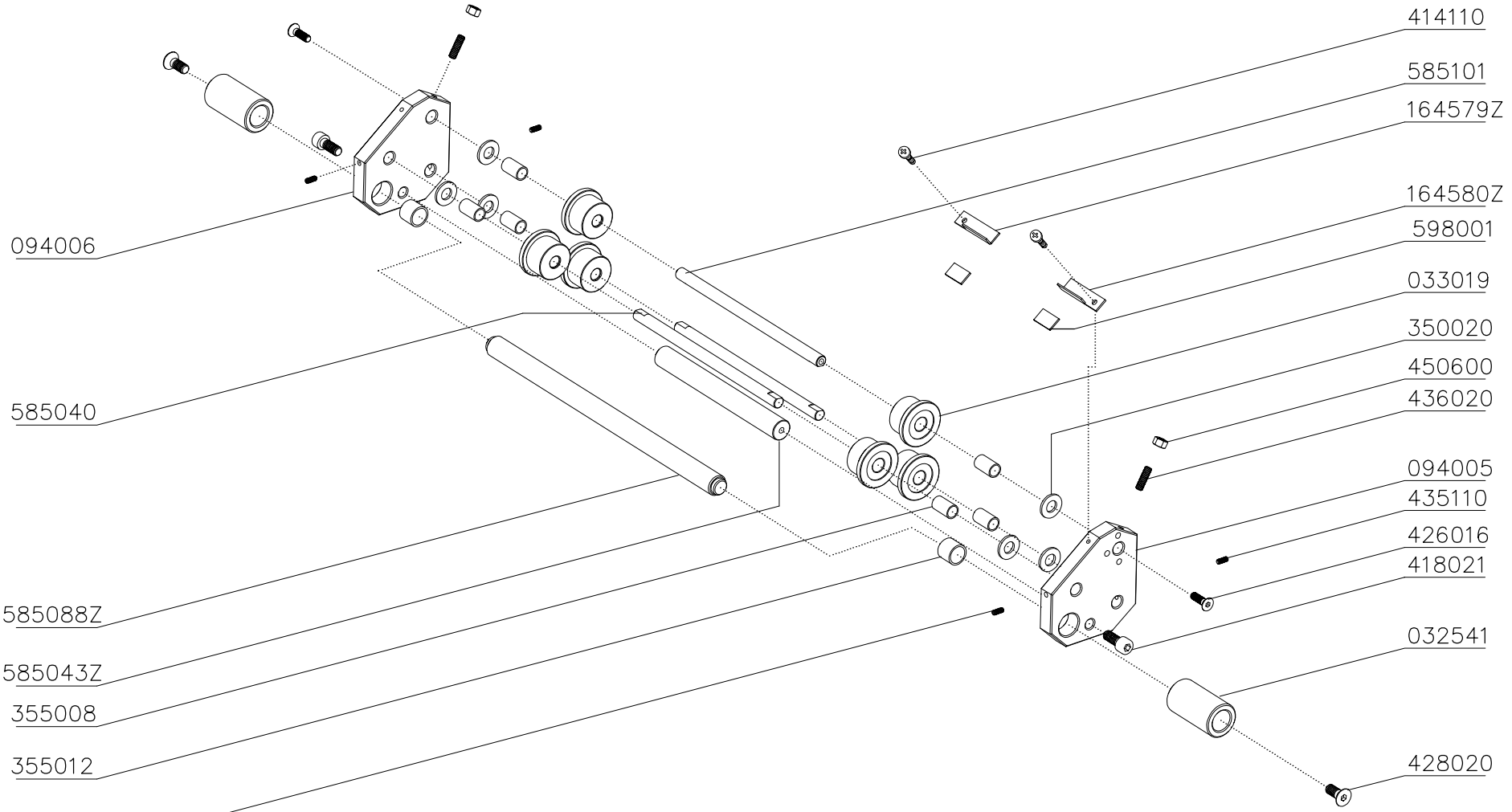

Sonar

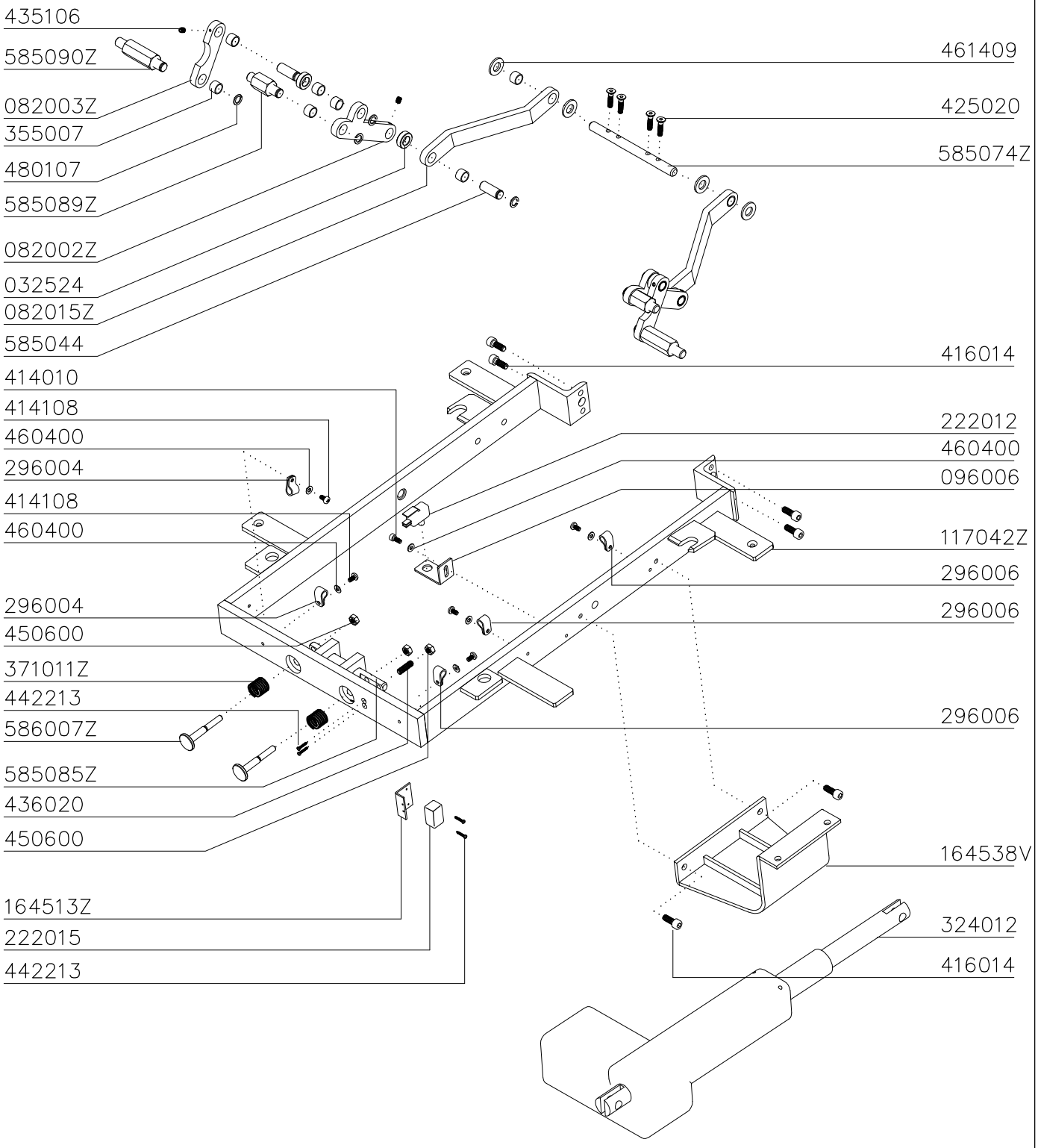
435106
585090Z
082003Z
355007
480107
585089Z
082002Z
032524
082015Z
585044
461409
425020
585074Z
416014
414010
414108
460400
296004
414108
460400
222012
460400
096006
117042Z
296006
296004
450600
296006
371011Z
442213
586007Z
585085Z
436020
450600
296006
164538V
324012
416014
164513Z
222015
442213

Sonar

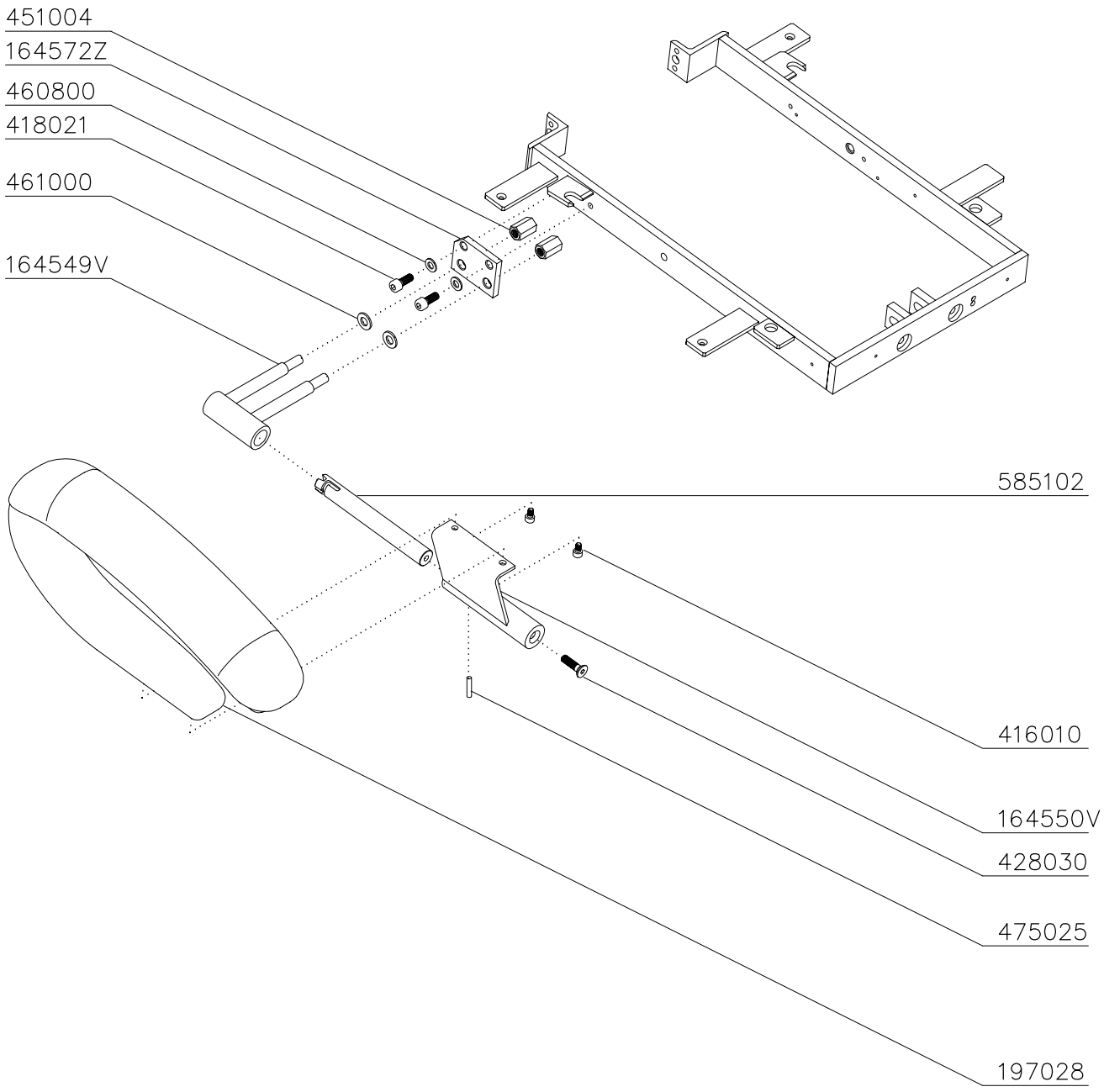
451004
164572Z
460800
418021
461000
164549V
585102
416010
164550V
428030
475025
197028

Sonar

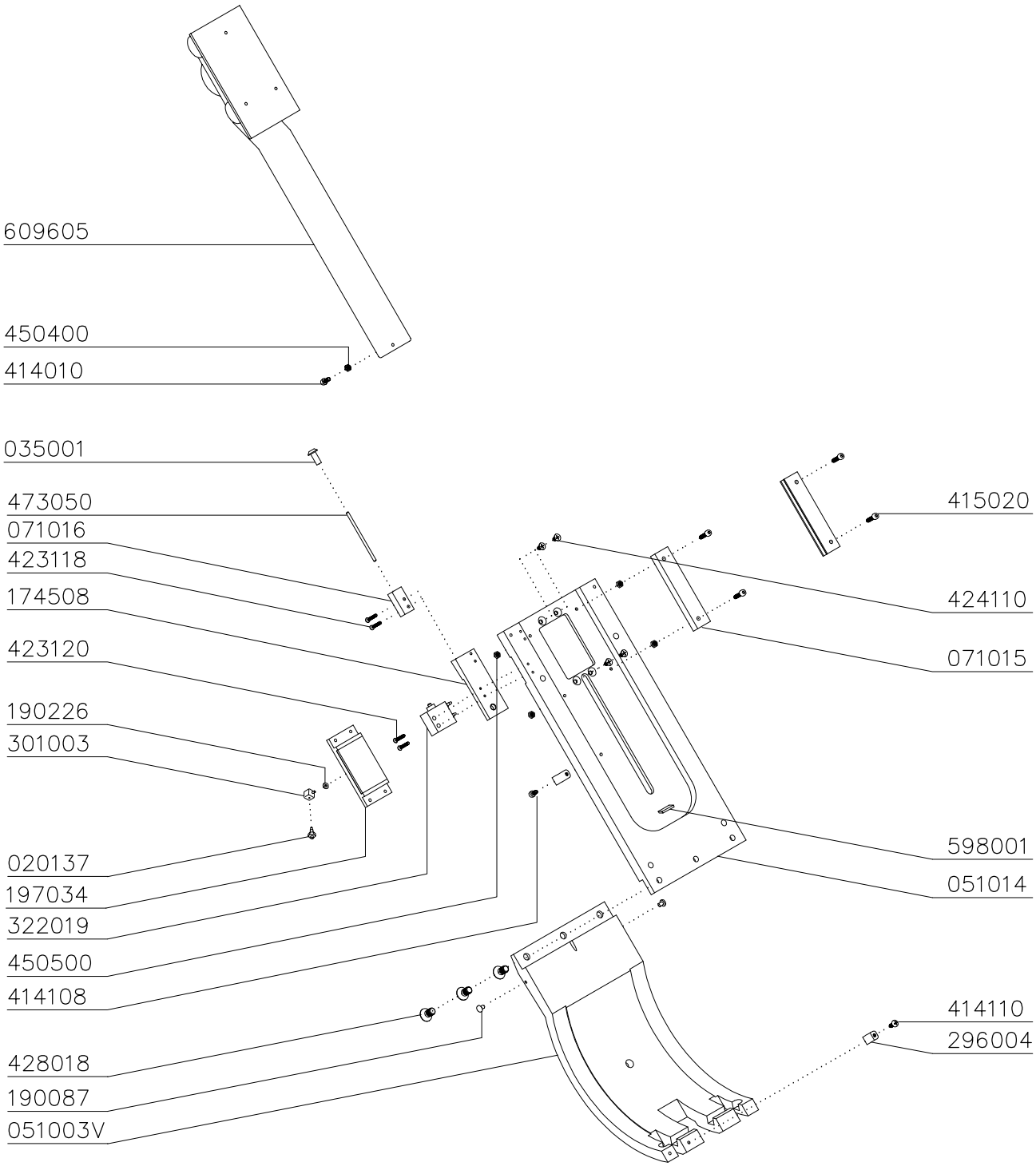
609605
450400
414010
035001
473050
071016
423118
174508
423120
190226
301003
020137
197034
322019
450500
414108
428018
190087
051003V
415020
424110
071015
598001
051014
414110
296004

BACK

Carter base

Cover of chair base

Tav/Dwg 01_08

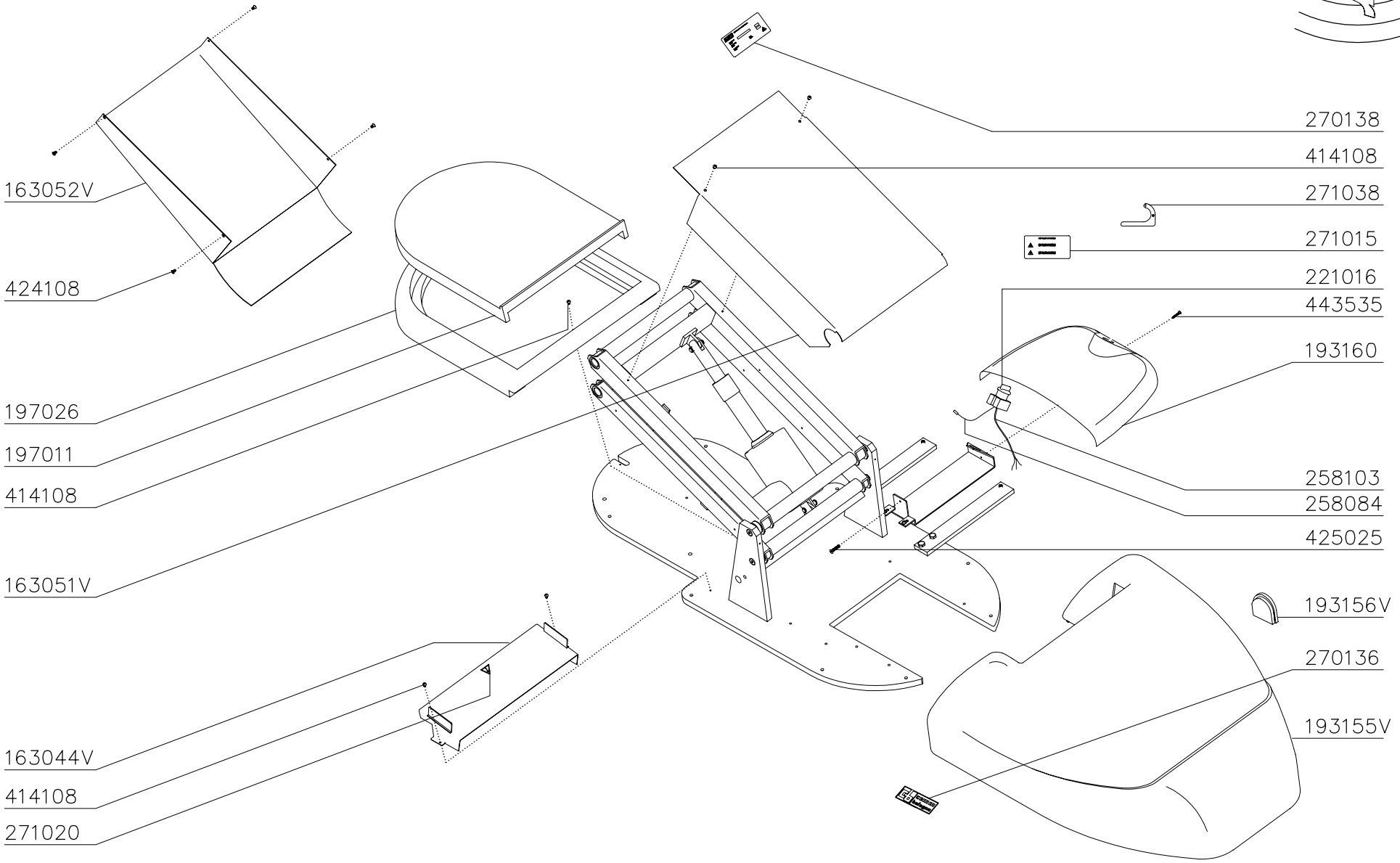

Sonar

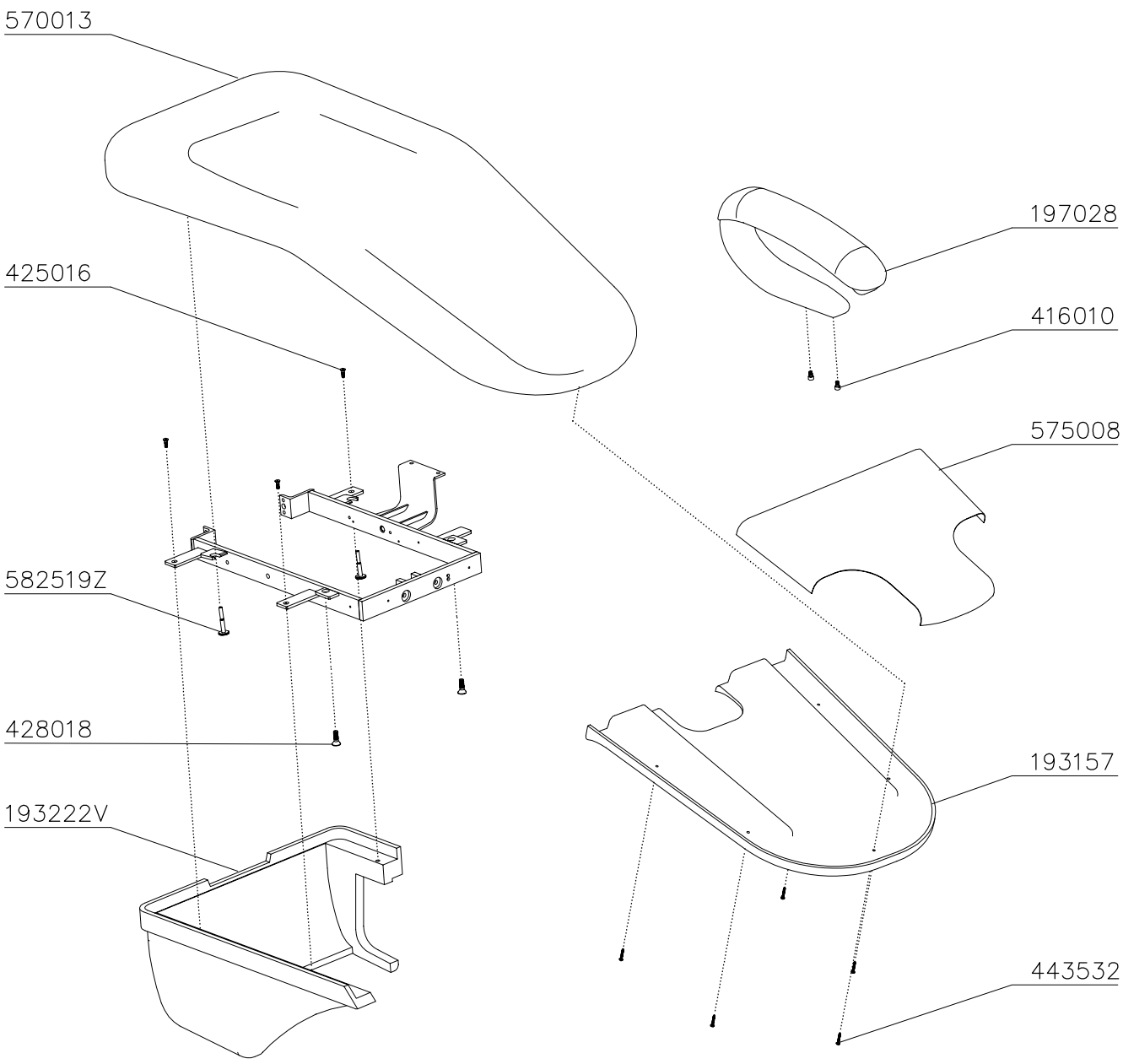
570013
197028
425016
416010
575008
582519Z
428018
193157
193222V
443532

Sonar

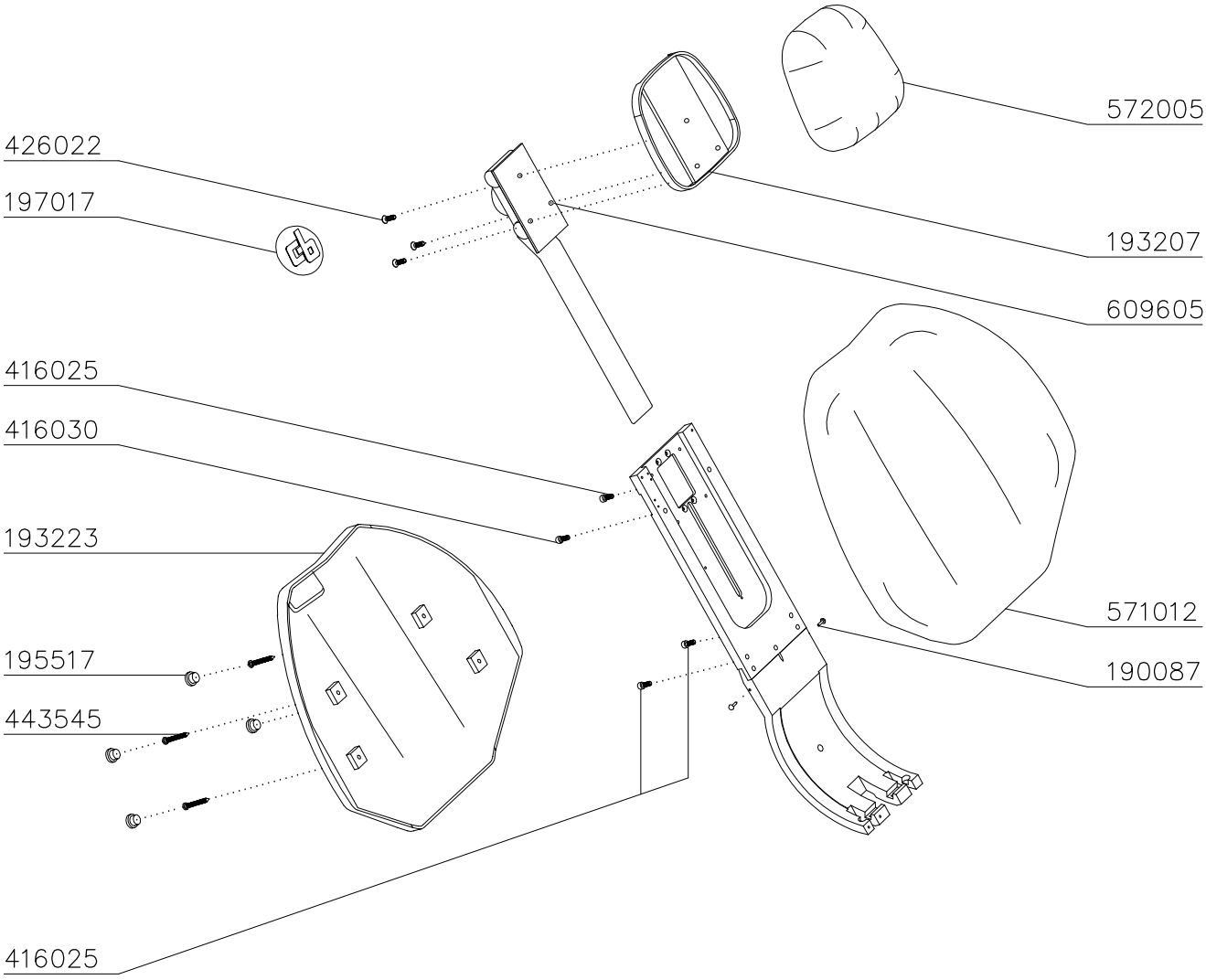
572005
426022
197017
193207
609605
416025
416030
193223
571012
190087
195517
443545
416025

BACK

Sonar

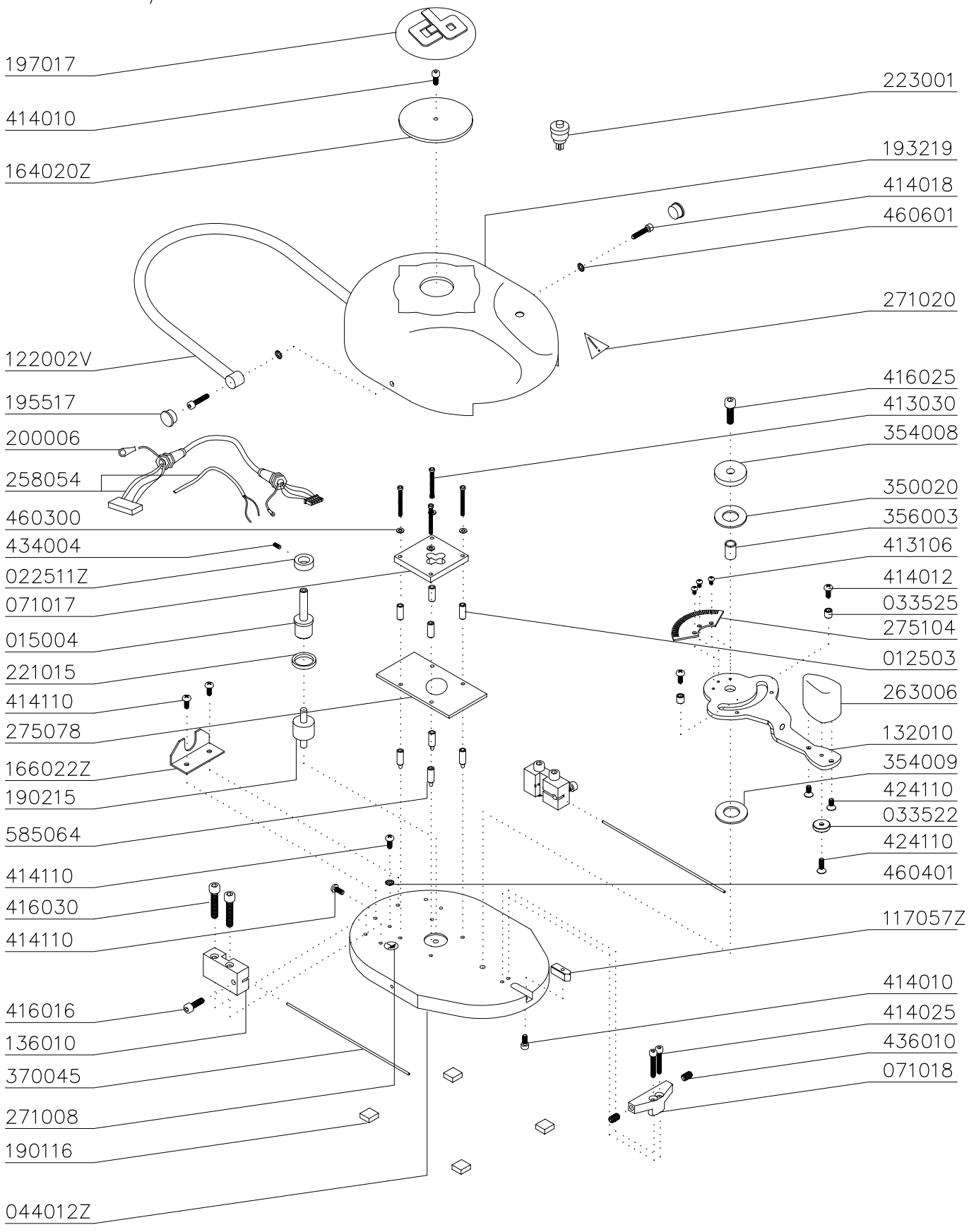

cemm bologna

Pedale

Foot–control

Tav/Dwg 02_01

BACK

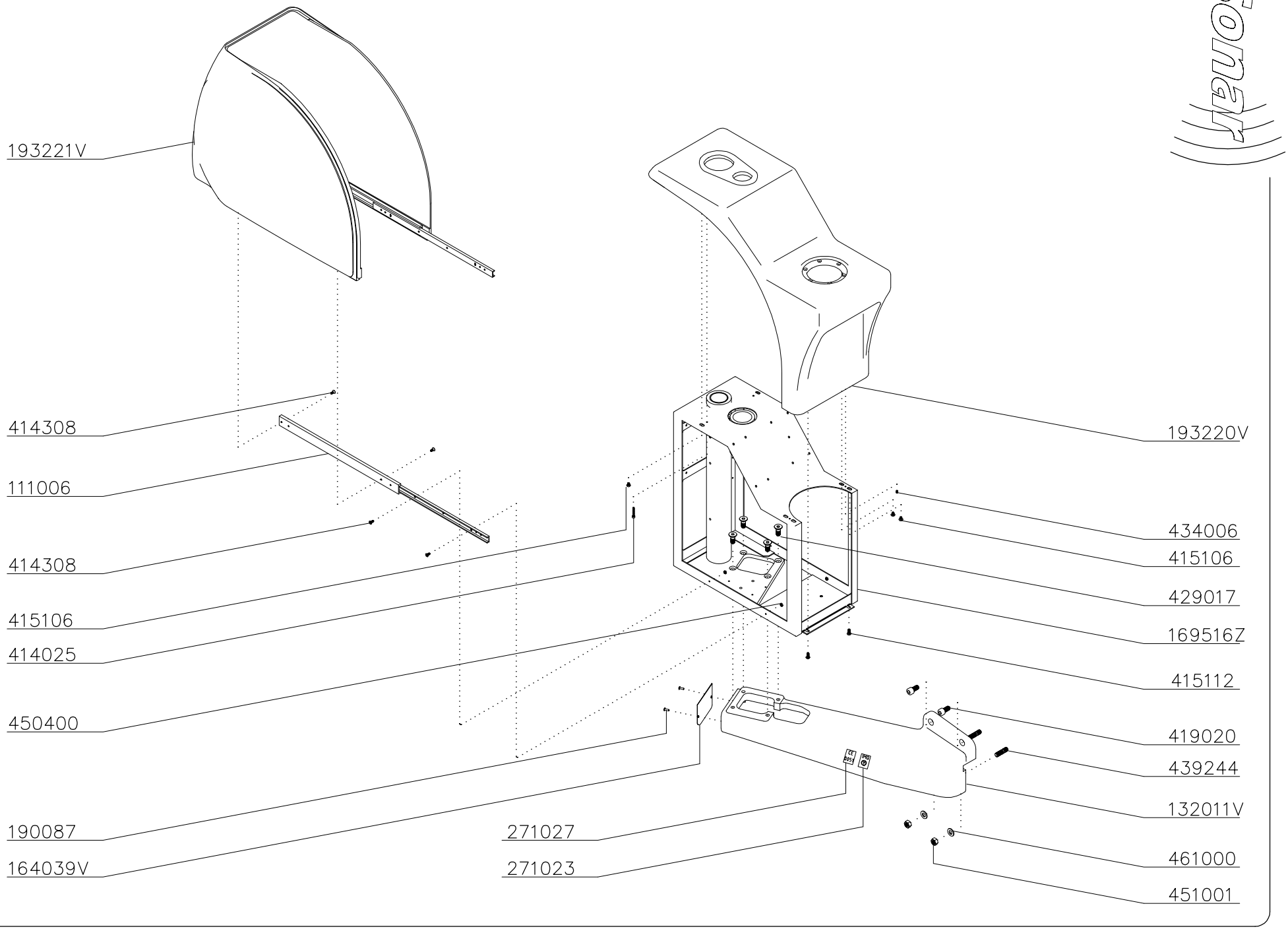

Carter riunito
Cover of Unit

Tav/Dwg 03_01

BACK

Base gruppo idrico
Base of spittoon unit

Tav/Dwg 03_02

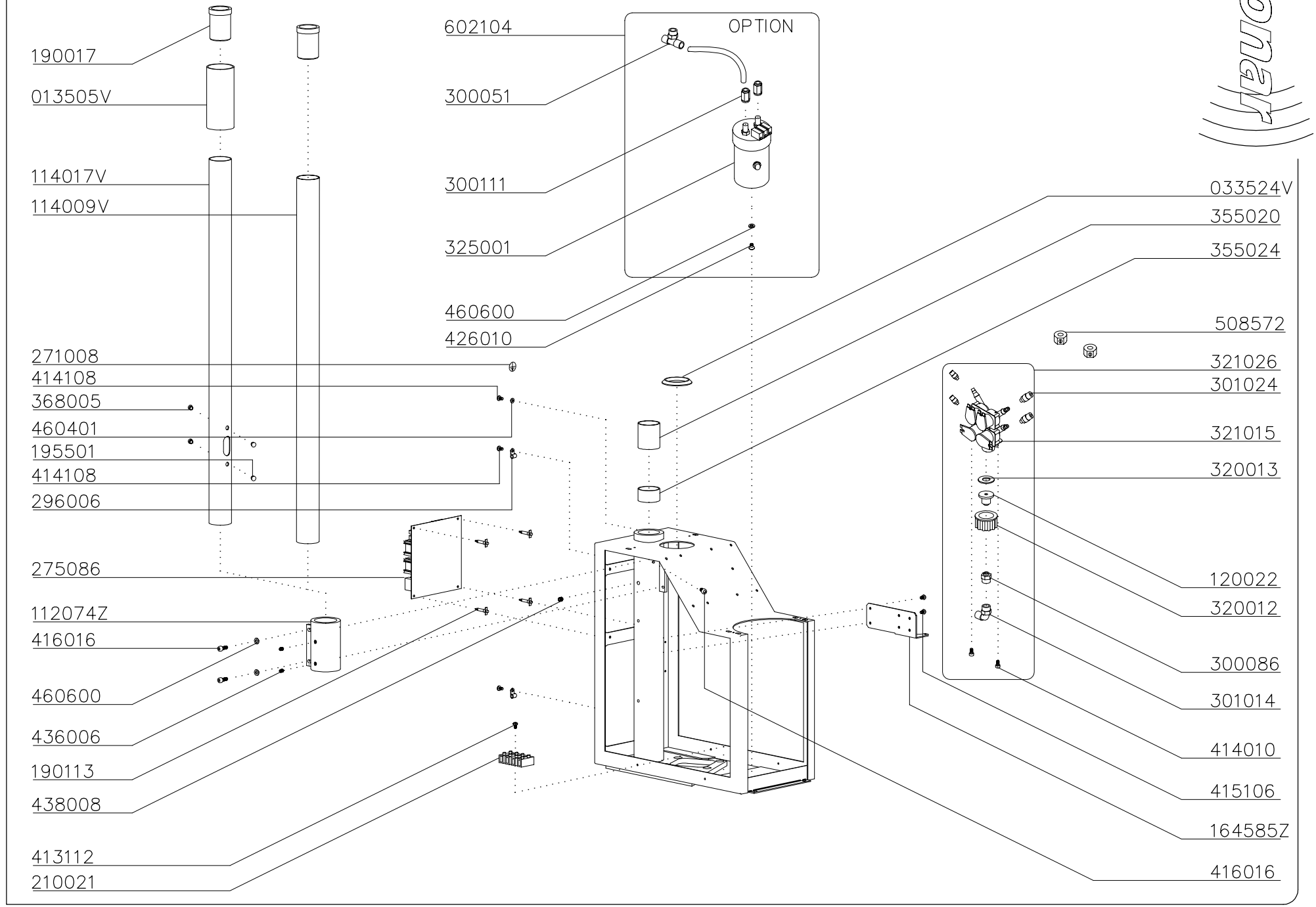

BACK

Sonar

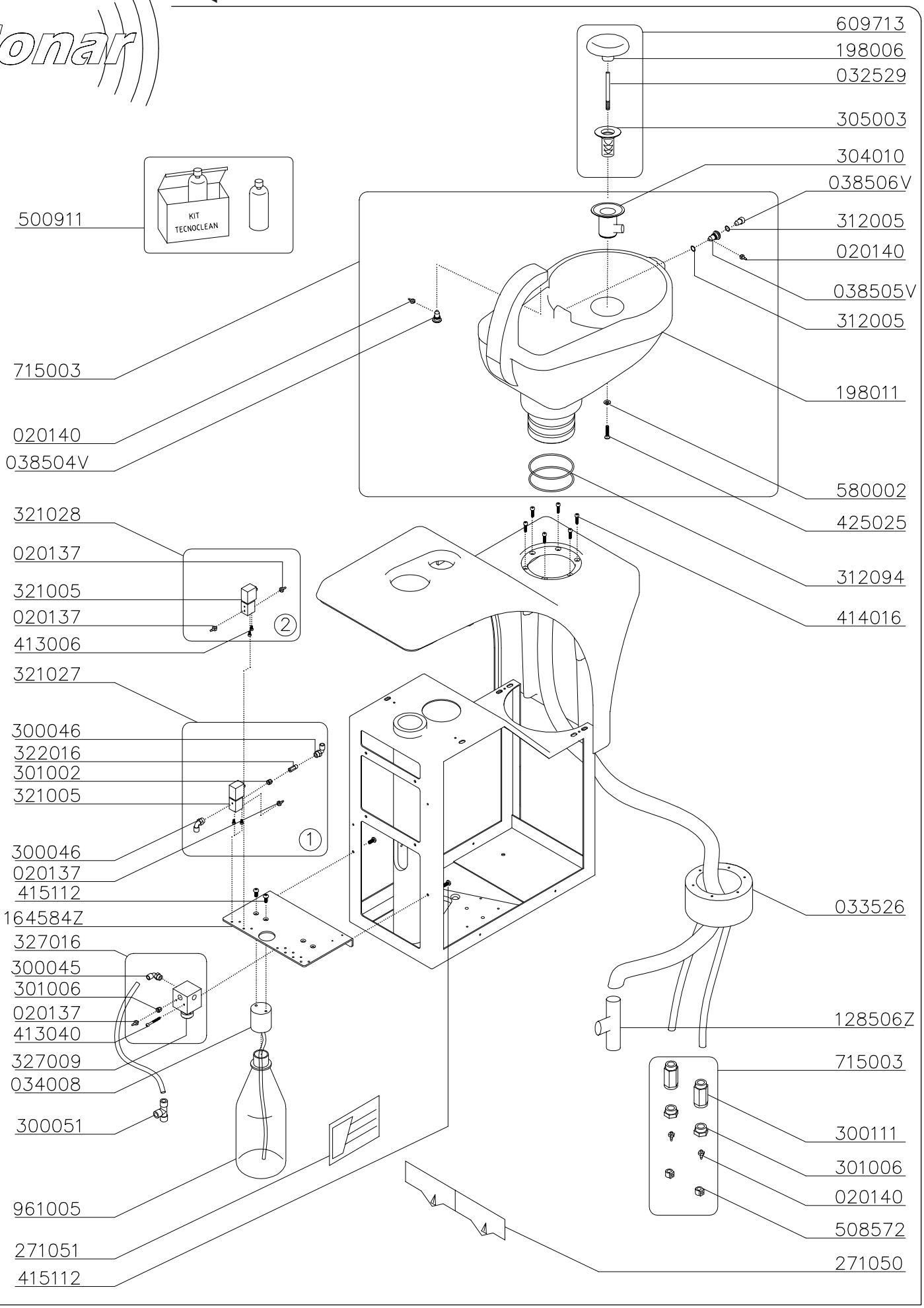

cemm bologna

Bacinella e Contenitore pressurizzato S4

Rinse Bowl & Pressurissed container S4 Tav/Dwg 03_03

Sonar

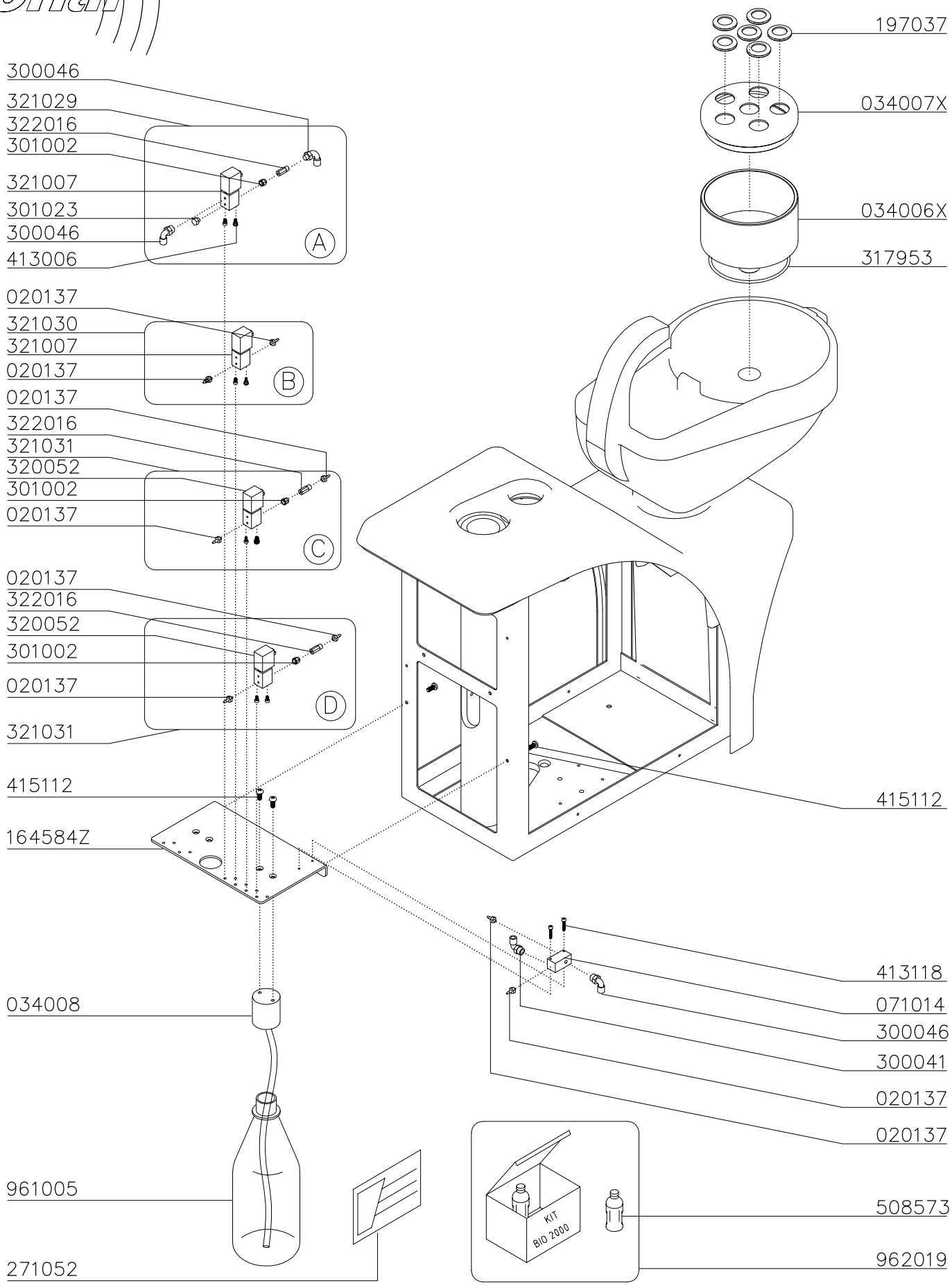
300046
321029
322016
301002
321007
301023
300046
413006
A
020137
321030
321007
020137
B
020137
322016
321031
320052
301002
020137
C
020137
322016
320052
301002
020137
D
321031
415112
164584Z
034008
961005
271052
197037
034007X
034006X
317953
415112
413118
071014
300046
300041
020137
020137
KIT
BIO 2000
508573
962019

BACK

Sonar

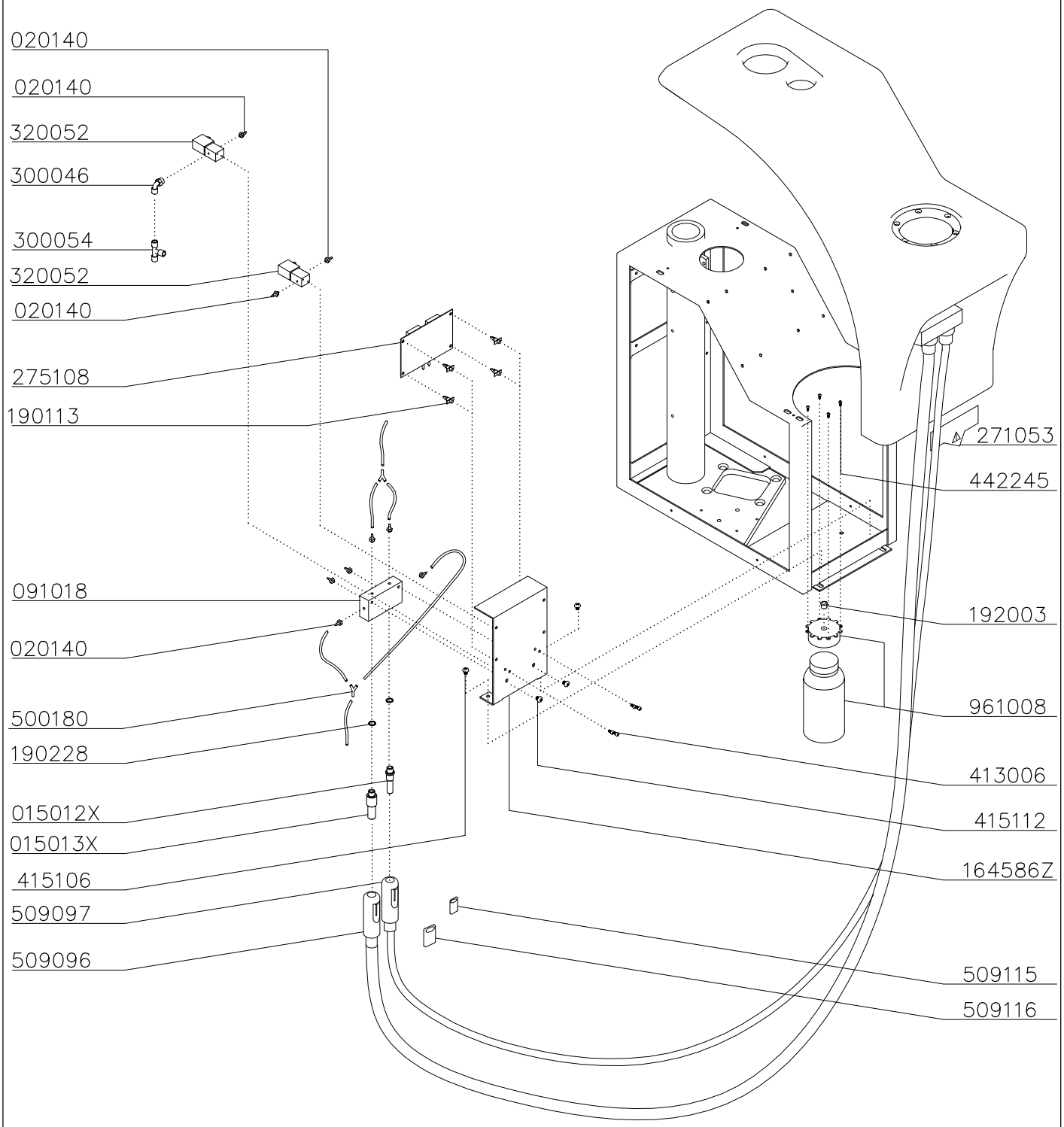

cemm bologna

Lavaggio cannule SWS

SWS – Cannulae Washing System

Tav/Dwg 03_05

Sonar

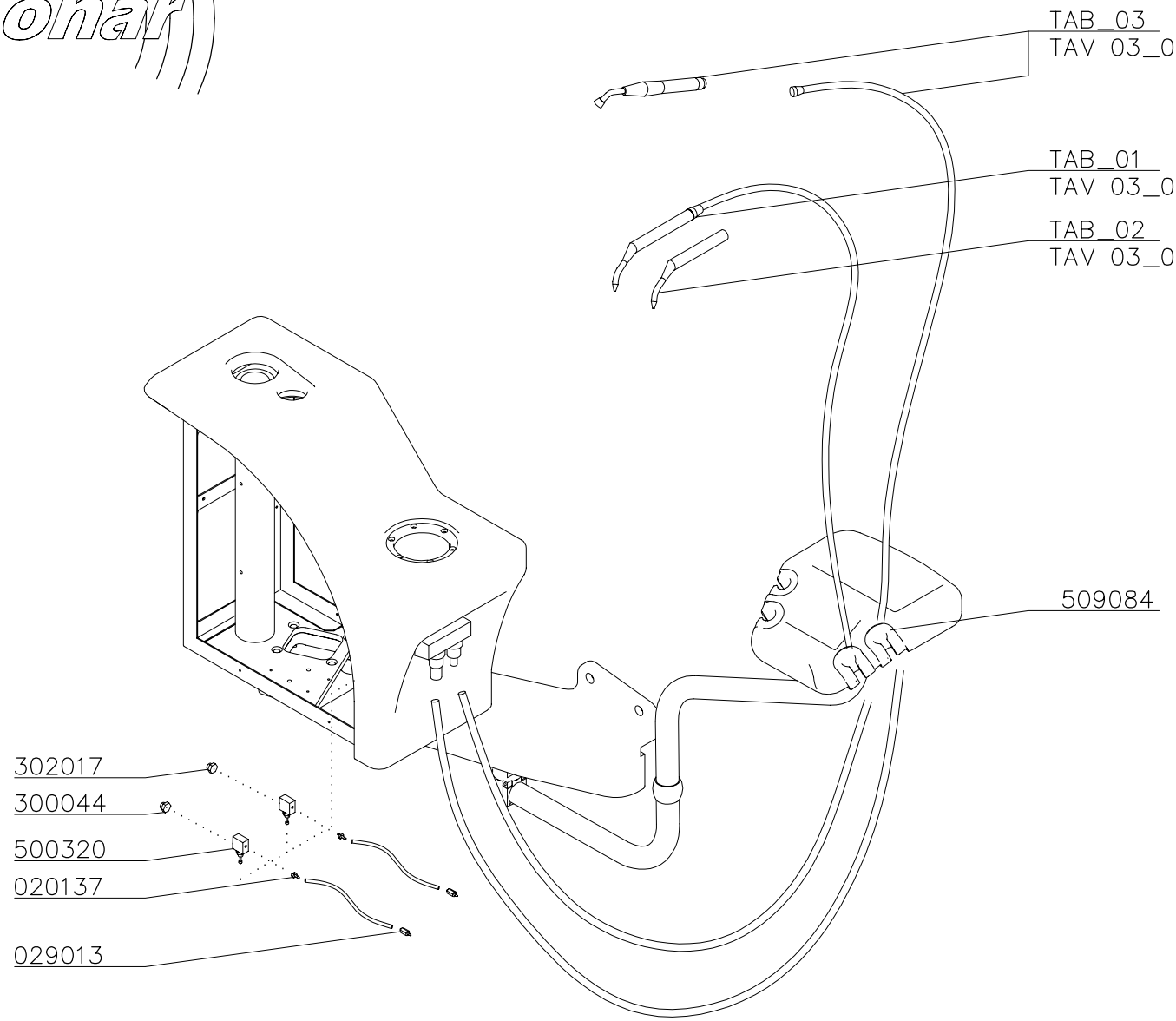

ITEM	COMPLETE HOSE	NUT	TAB_01
MINIMATE 3F INOX	504079	509084	
MINILIGHT 3F	504071	509083	

AUTOCLAVABLE PARTS	CODE	TAB_02
MINIMATE INOX – STRAIGHT	504609	
MINIMATE INOX – CURVED	504610	
MINILIGHT INOX – STRAIGHT	504606	
MINILIGHT – STRAIGHT	504601	
MINILIGHT – CURVED	504602	
MINILIGHT INOX – CURVED	504608	

POLYMERISATION	COMPLETE HOSE	TAB_03
POILED FARO	505553	
MECTRON	505551	
SATELEC	509852	

BACK

Sonar

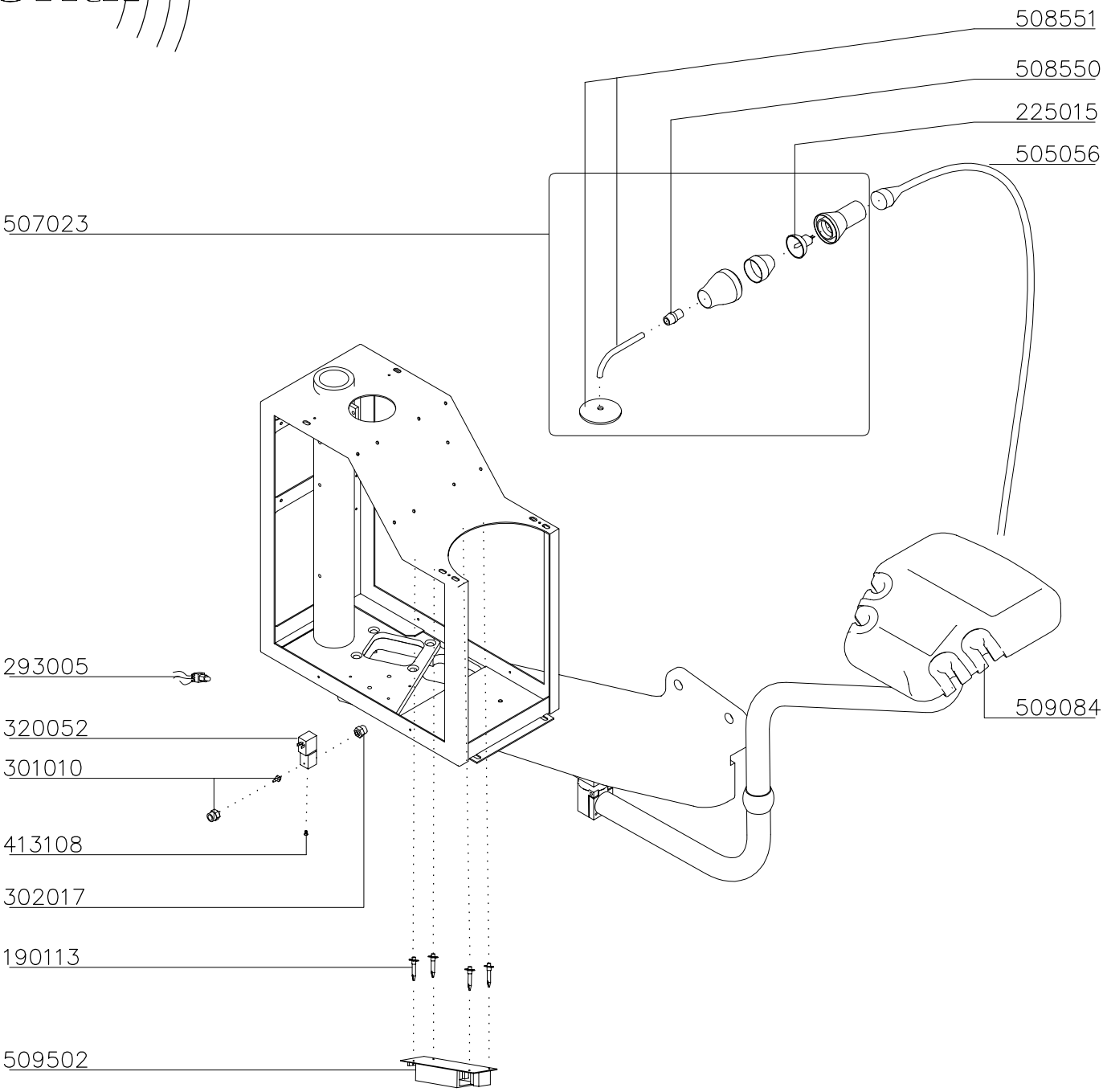

cemm bologna

Polimerizzatrice Faro PU 504

Polymerisation Faro PU 504

Tav/Dwg 03_07

Sonar

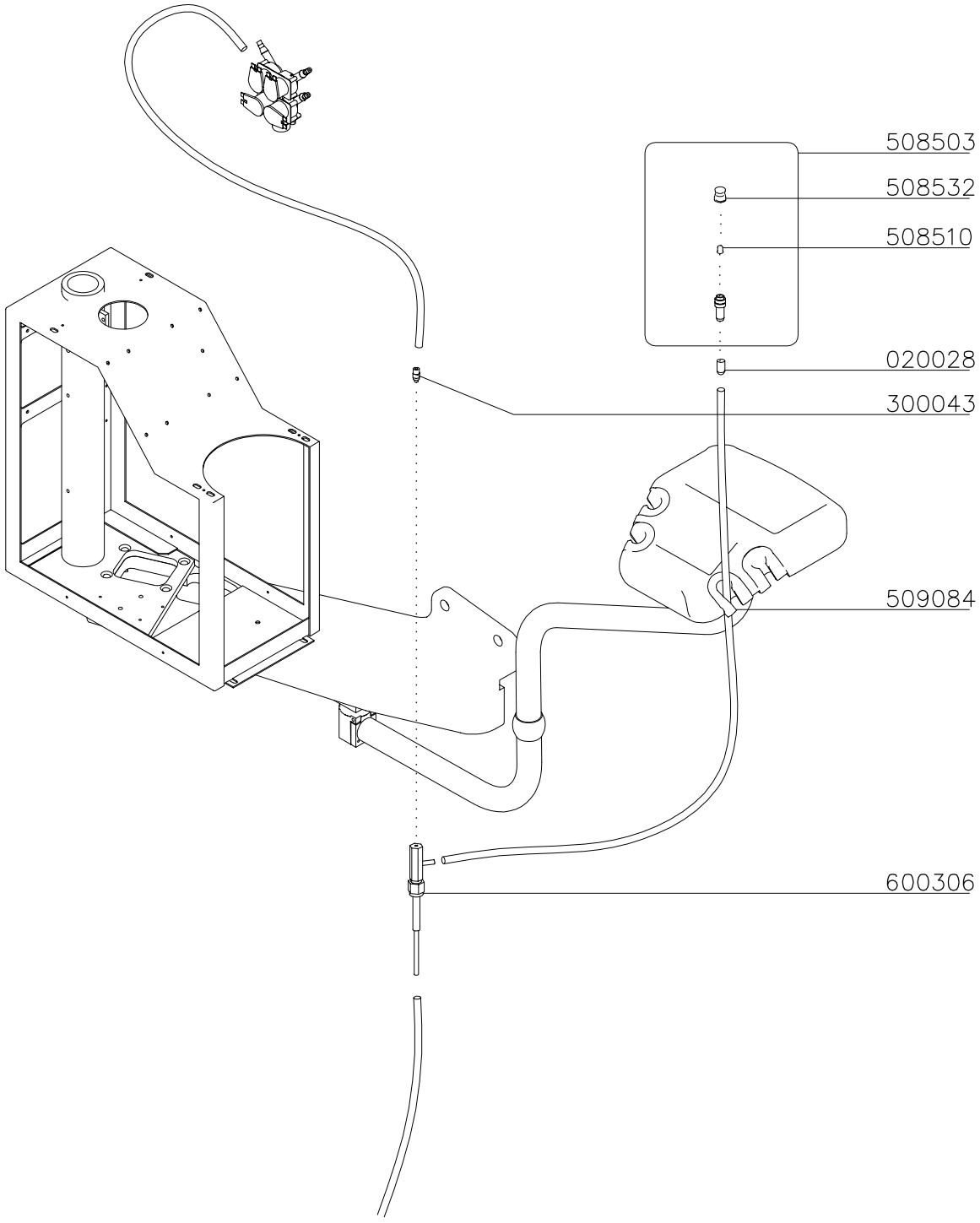

BACK

Sonar

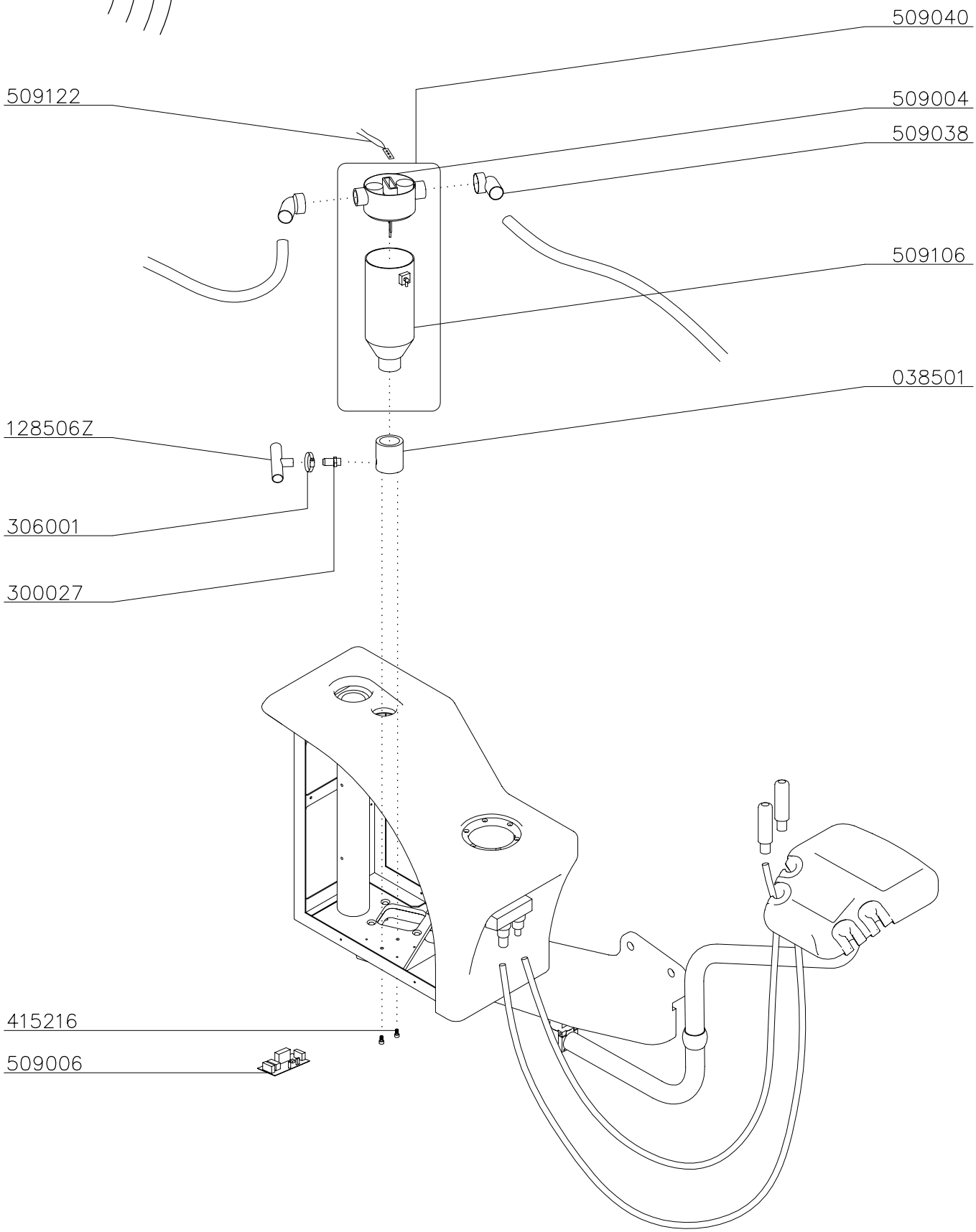

cemm bologna

Miniseparatore
Miniseparator

Tav/Dwg 03_09

BACK

Sonar

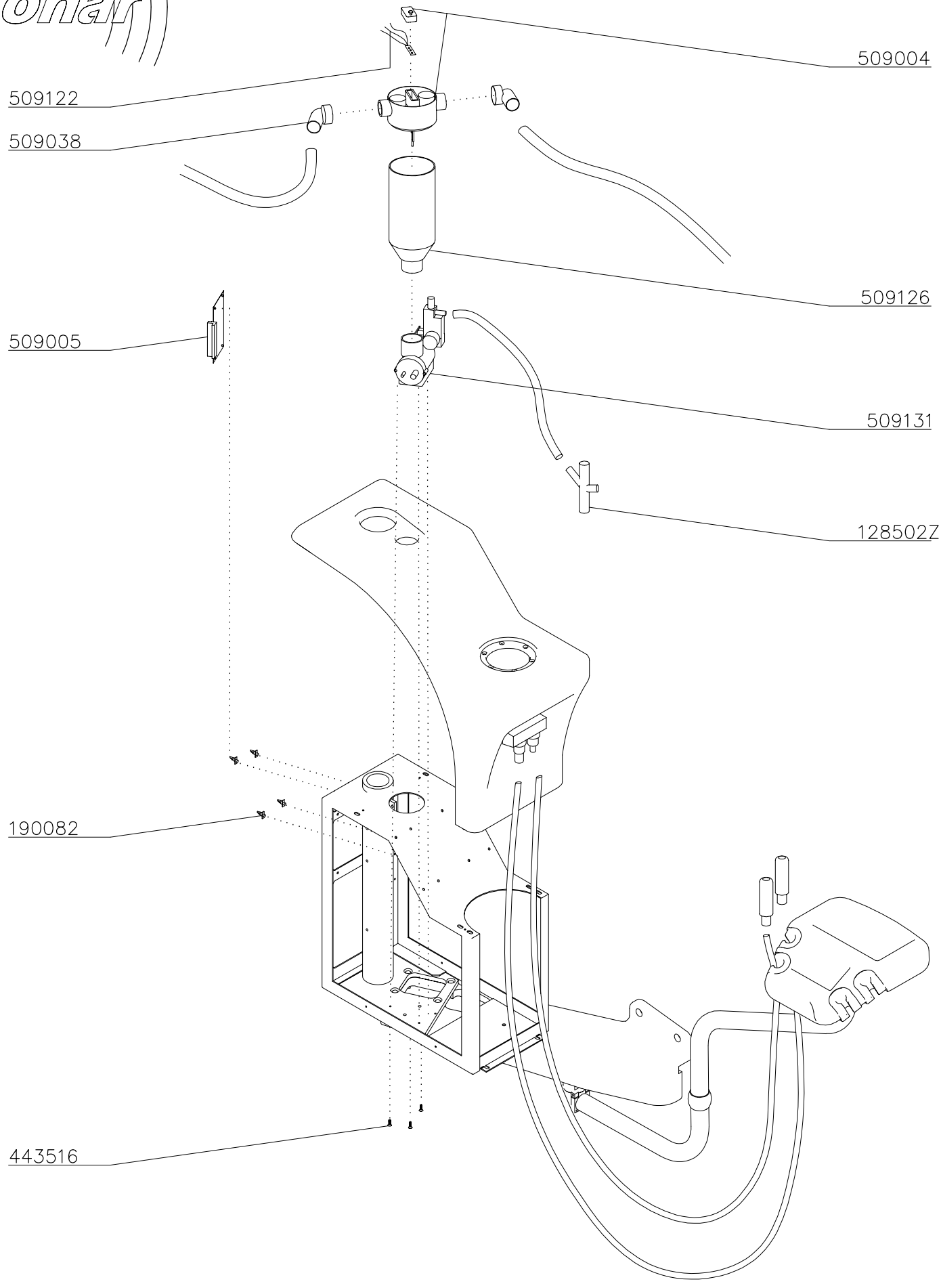

cemm bologna

Miniseparatore con pompa

Miniseparator with Pump

Tav/Dwg 03_10

BACK

Sonar

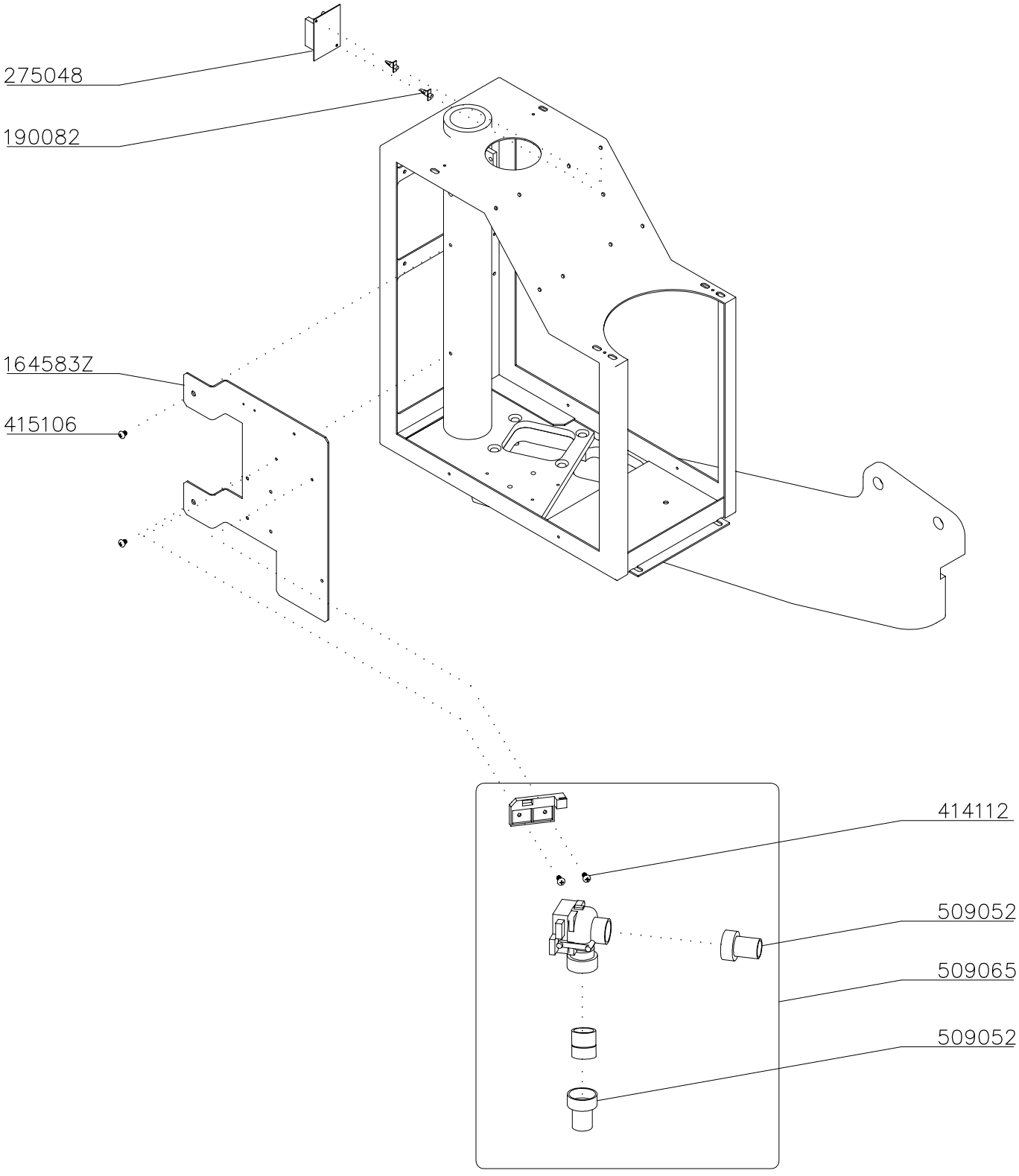

cemm bologna

Valvola elettropneumatica Mignon

Electro pneumatic valve Mignon

Tav/Dwg 03_11

Sonar

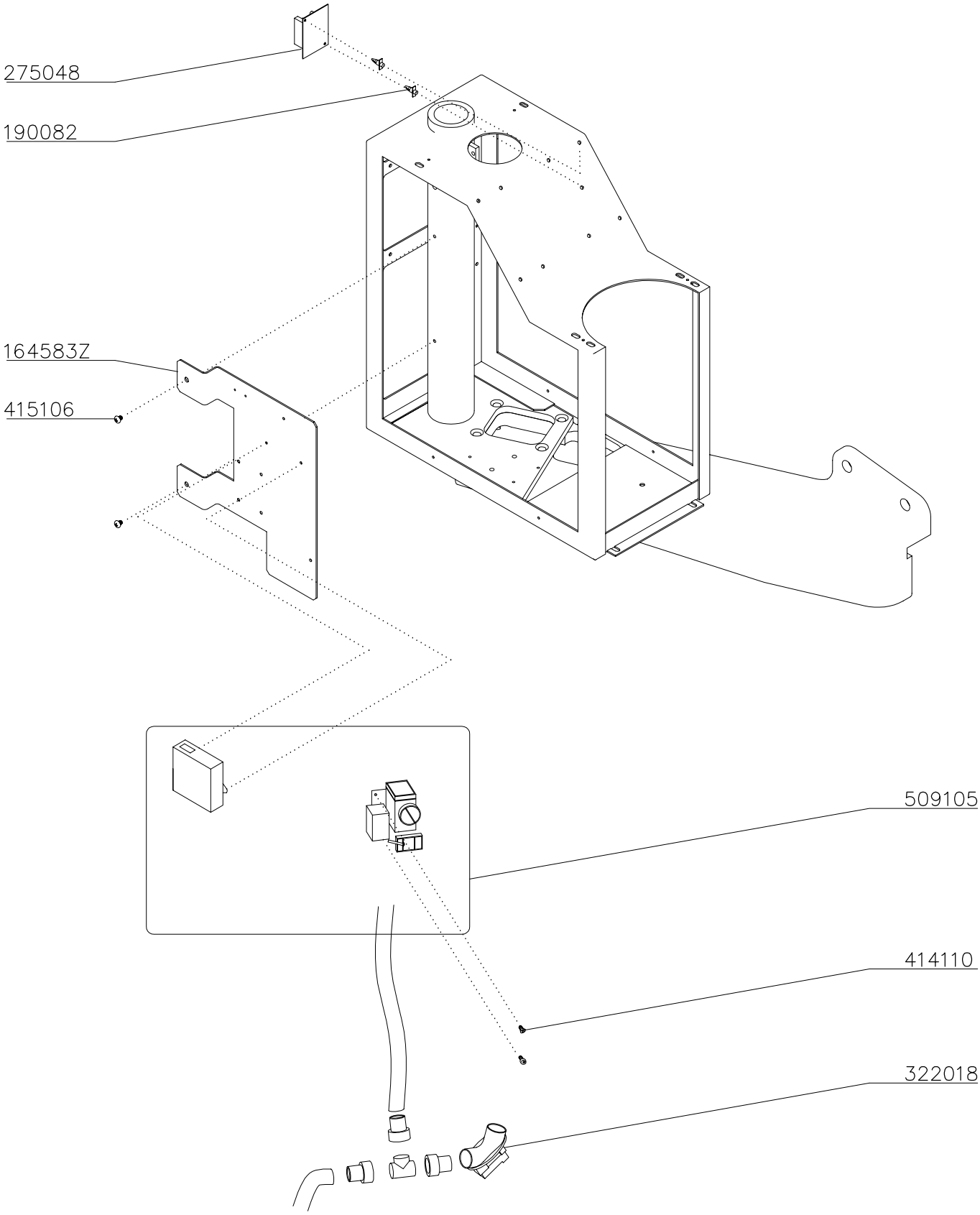

BACK

Sonar

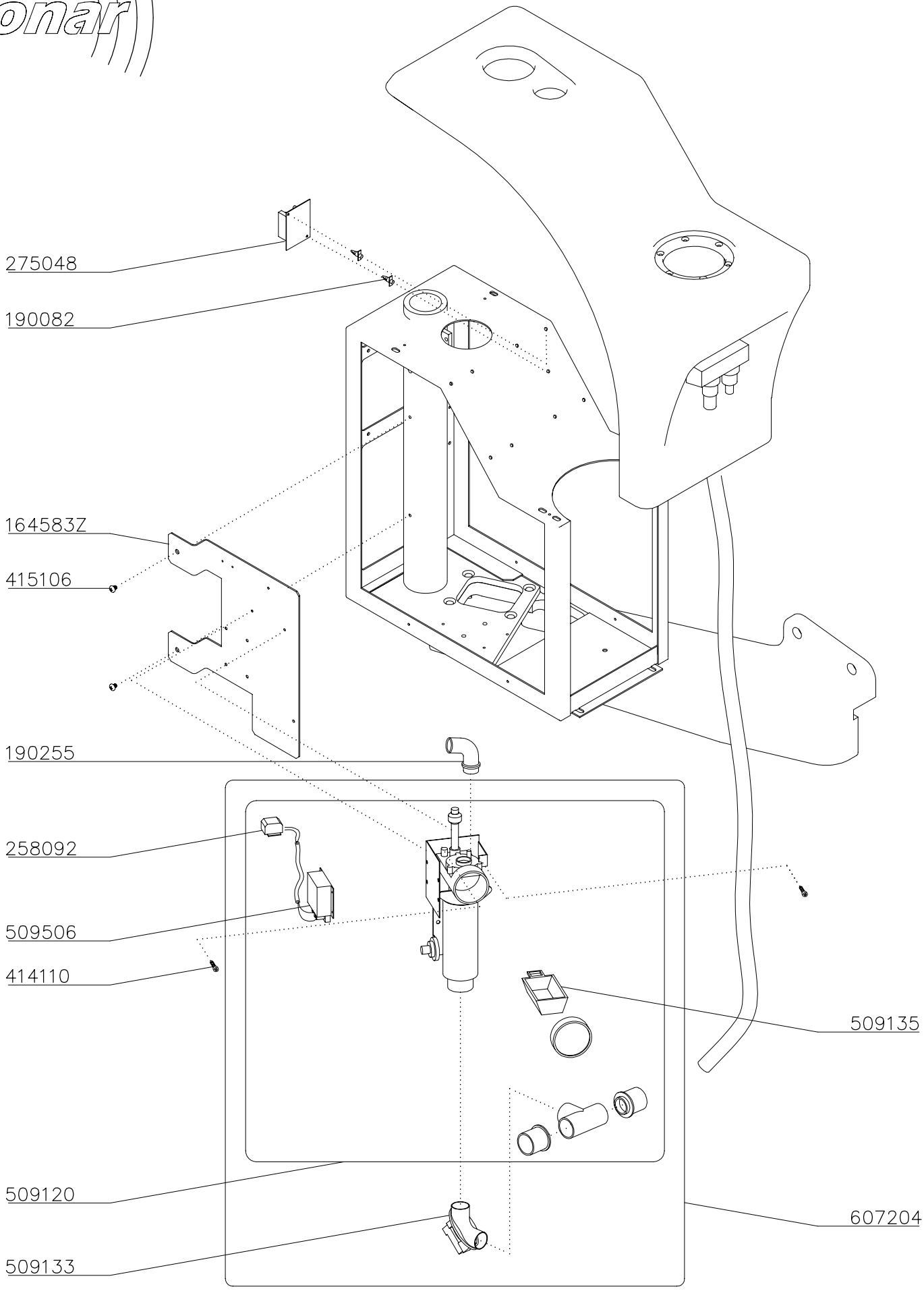

cemm bologna

Drenaggio Metasys per bacinella

Bowl draining by Metasys

Tav/Dwg 03_13

BACK

Sonar

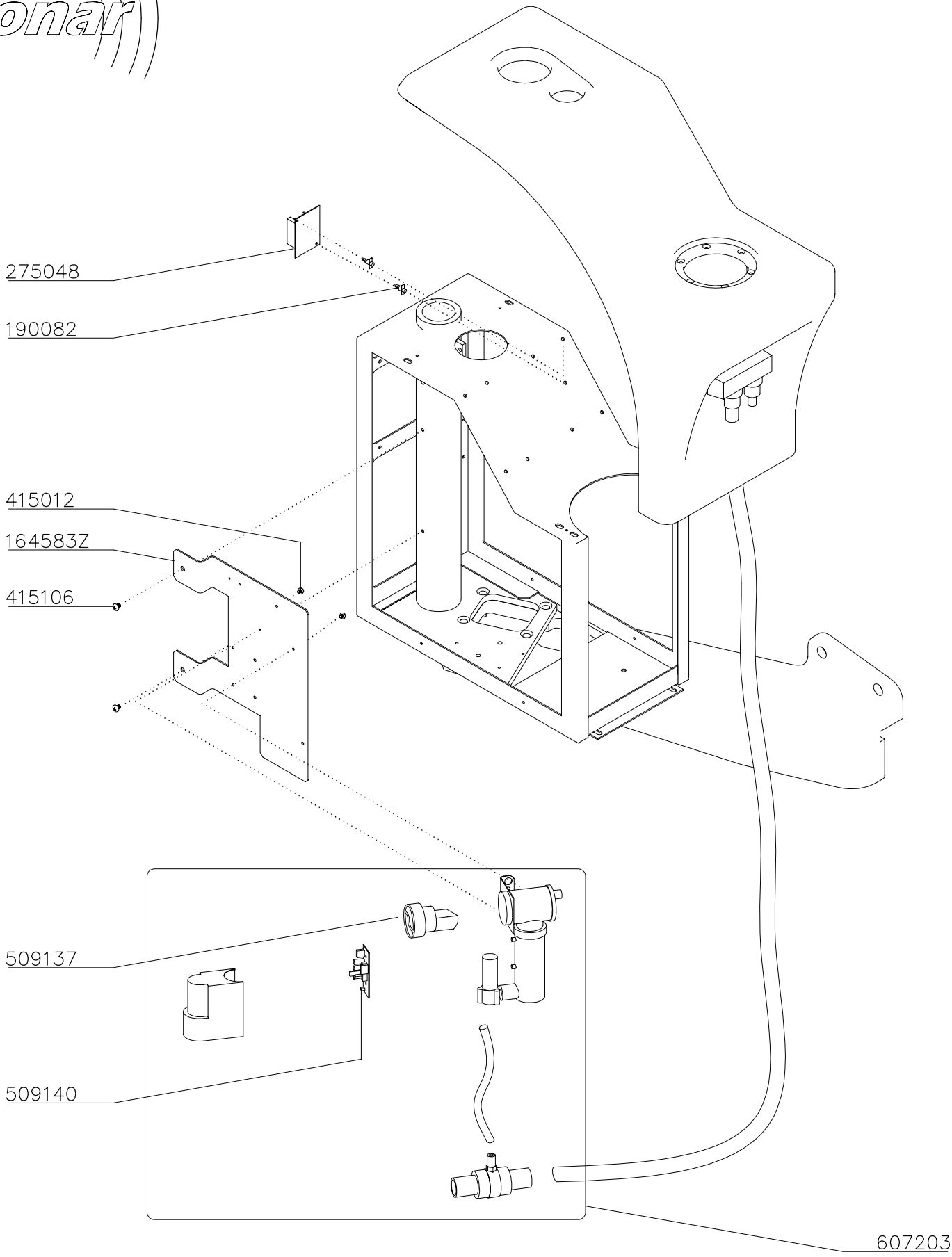

cemm bologna

Drenaggio Cattani per bacinella

Bowl draining by Cattani

Tav/Dwg 03_14

BACK

Sonar

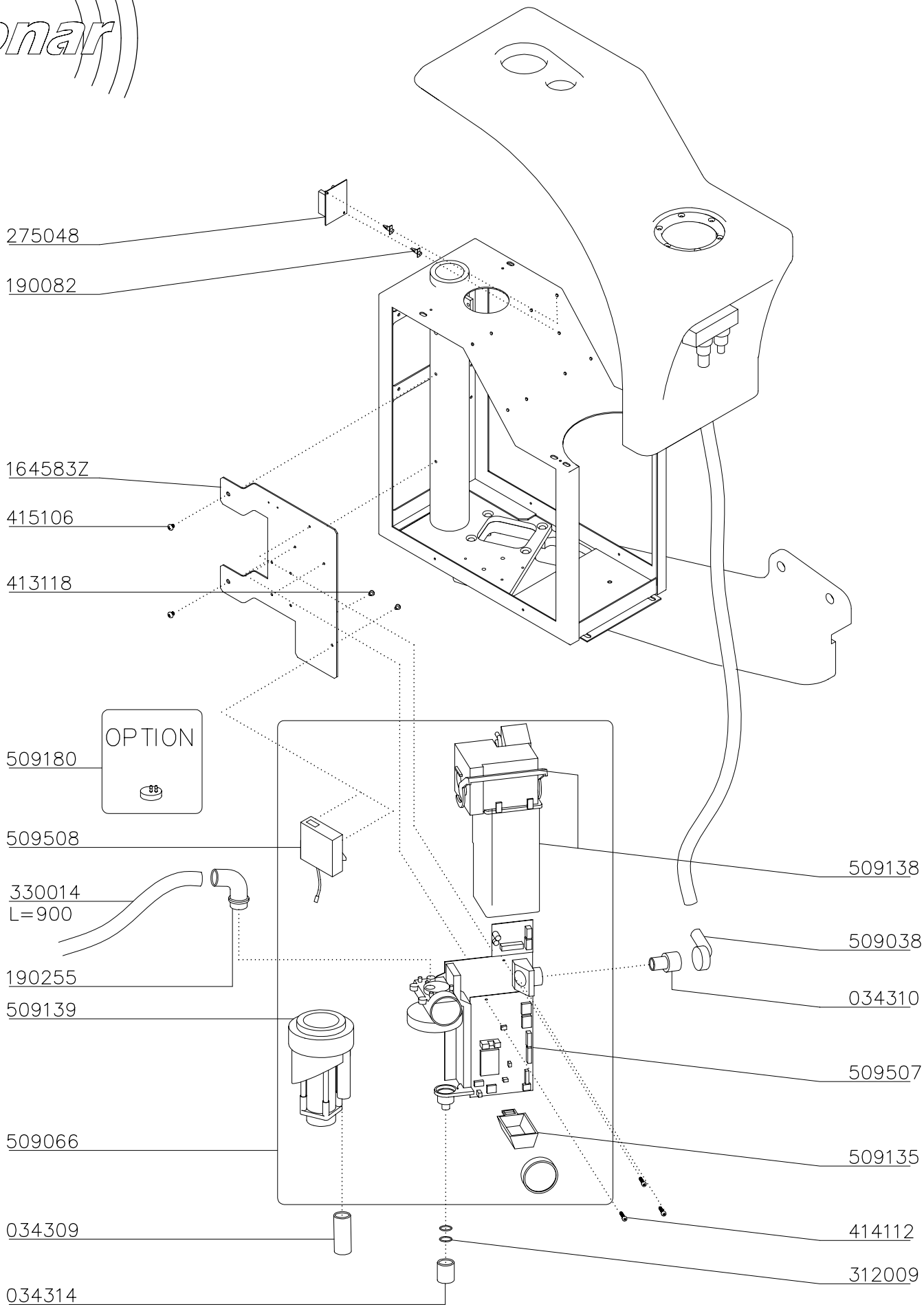
275048
190082
164583Z
415106
413118
OPTION
509180
509508
330014
L=900
190255
509139
509066
034309
034314
509138
509038
034310
509507
509135
414112
312009

BACK

Sonar

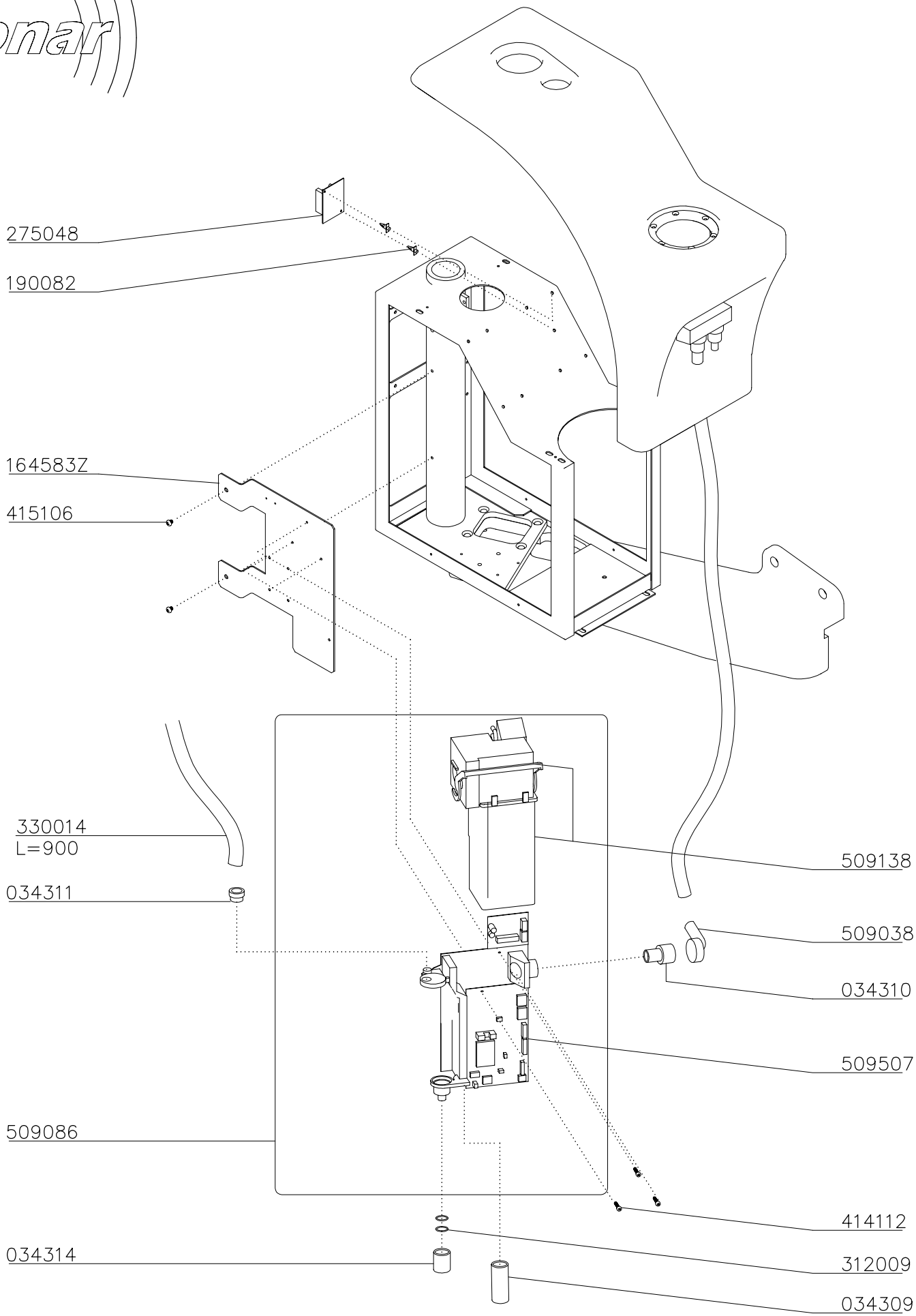

cemm bologna

Metasys Eco

Metasys Eco

Tav/Dwg 03_16

BACK

Sonar

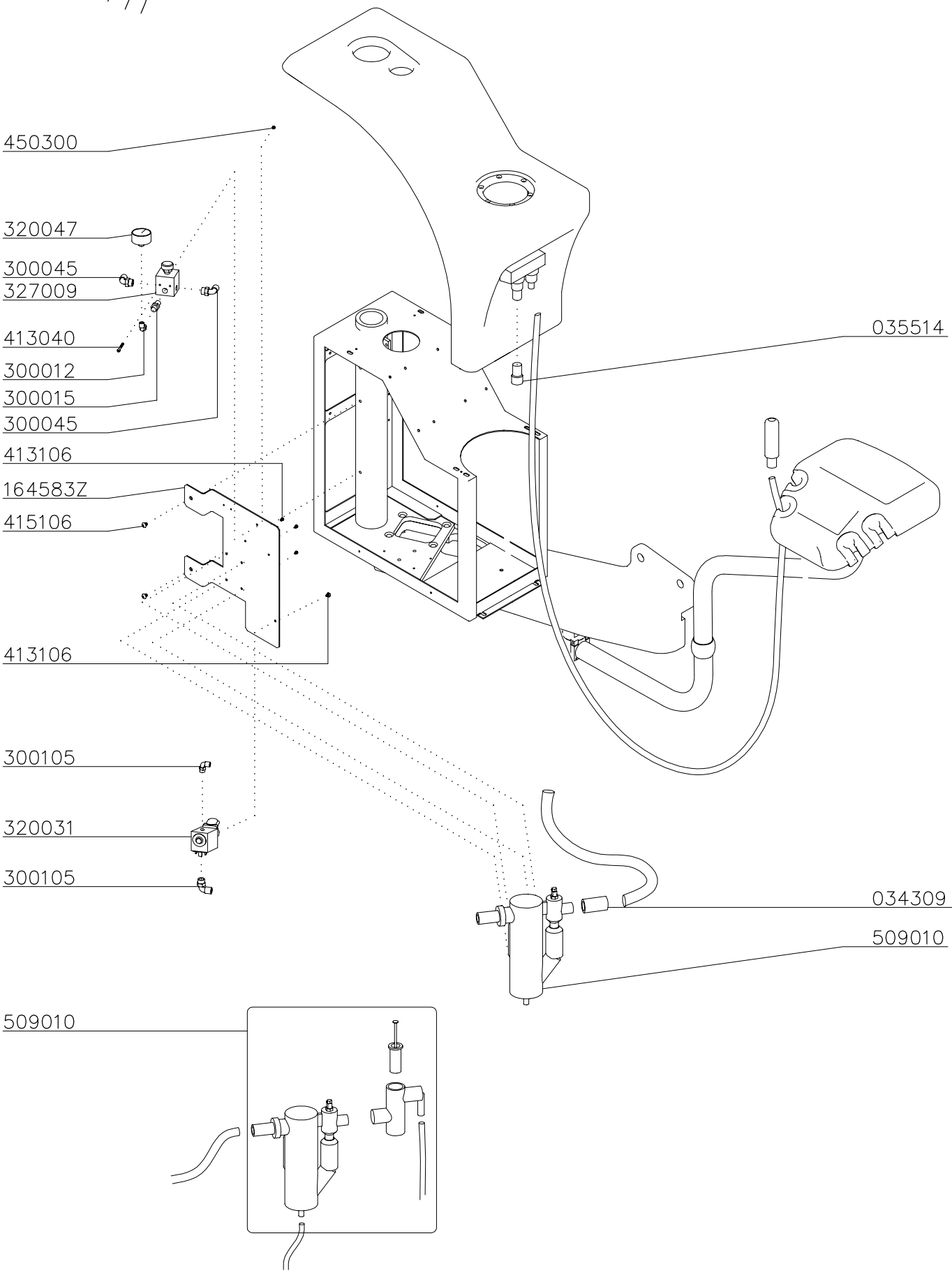

cemm bologna

Aspiratore pneumatico Cattani

Pneumatic aspirator by Cattani

Tav/Dwg 03_17

BACK

Sonar

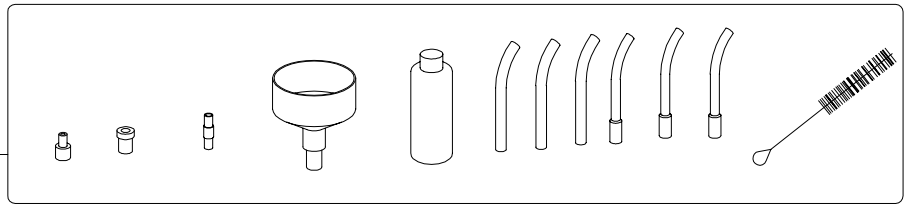

509085

500022

500252

500020

509096

509097

509100

509101

337003

337004

330024

038503

450400

509095

424135

509094

Collettore semplice Cattani

Simple collector by Cattani

Tav/Dwg 03_18

BACK

Sonar

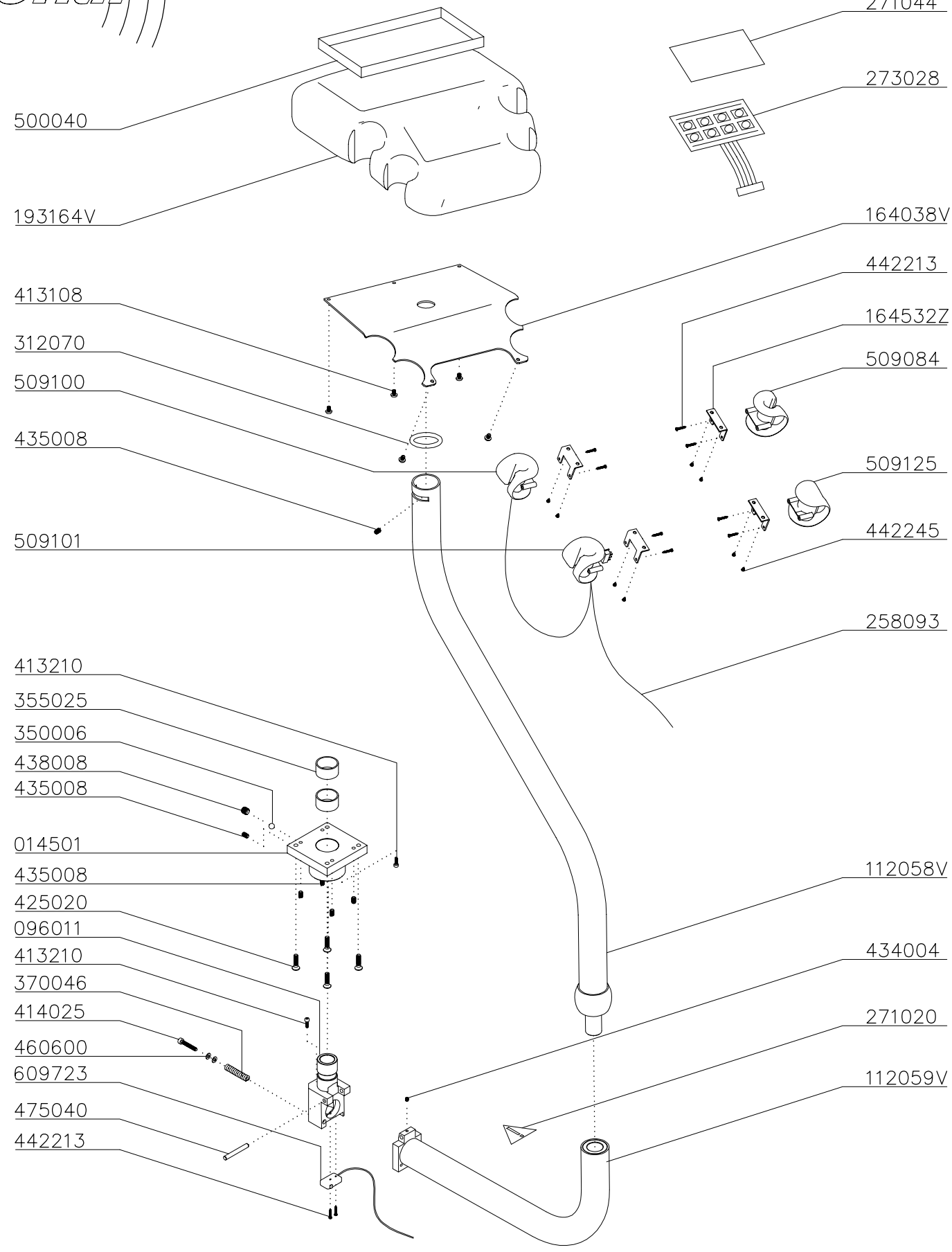

cemm bologna

Gruppo assistente

Nurse's holder

Tav/Dwg 04_01

Sonar

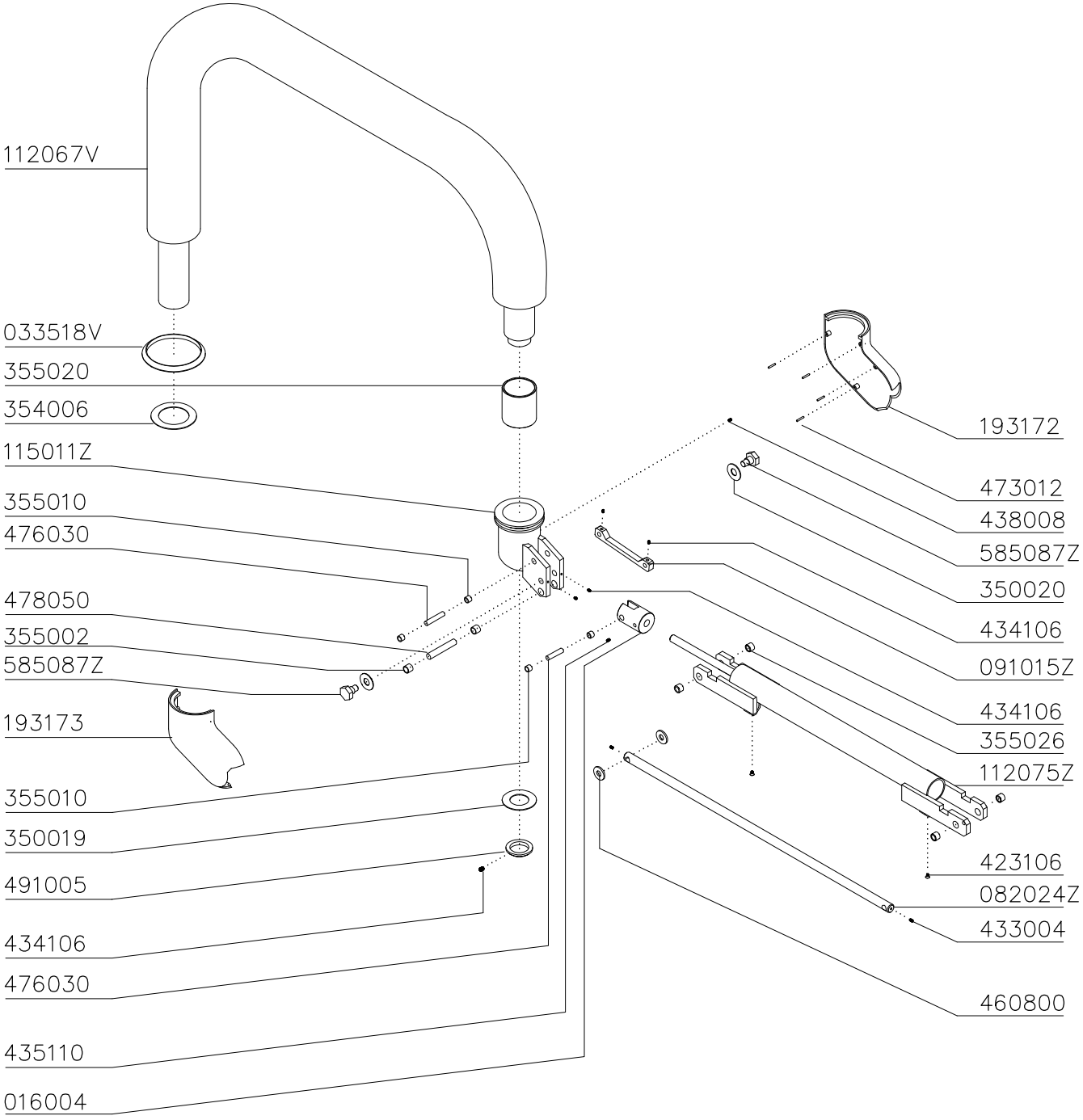

cemm bologna

Vista posteriore braccio

Back view of the arm

Tav/Dwg 05_01

Sonar

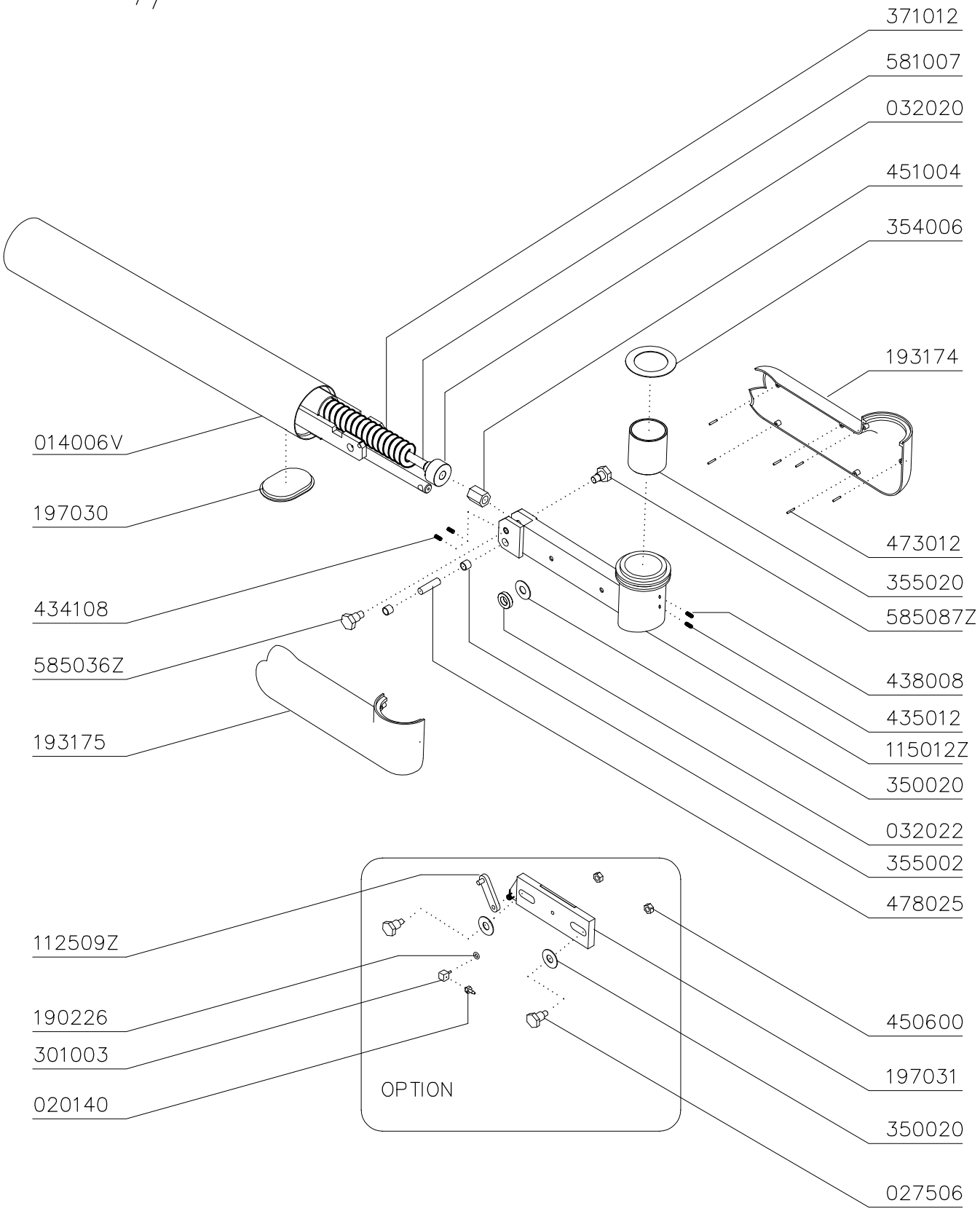

cemm bologna

Vista anteriore braccio
Front view of the arm

Tav/Dwg 05_02

BACK

Sonar

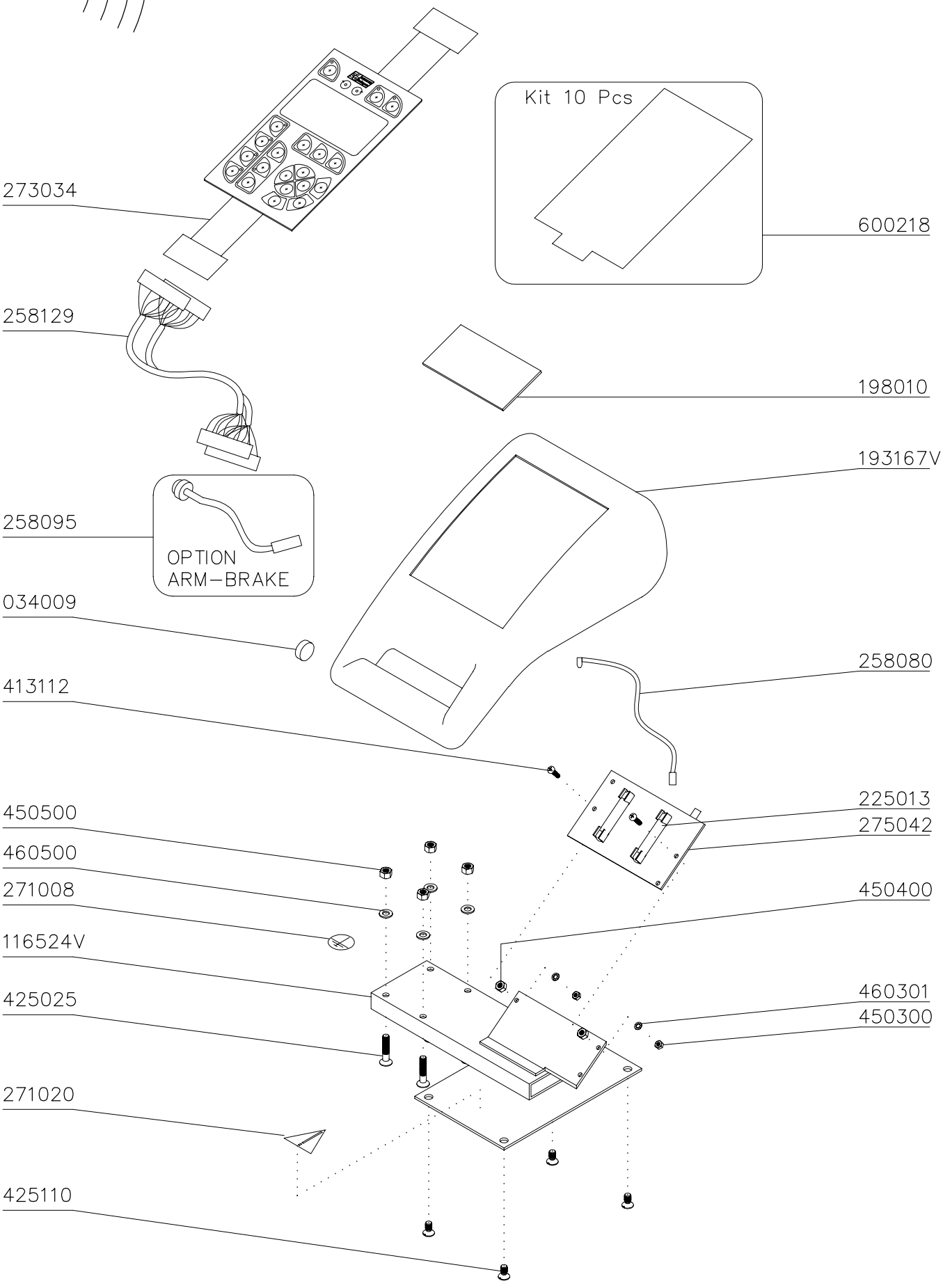

cemm bologna

Pannello comandi
Doctor's keyboard

Tav/Dwg 06_01

BACK

Sonar

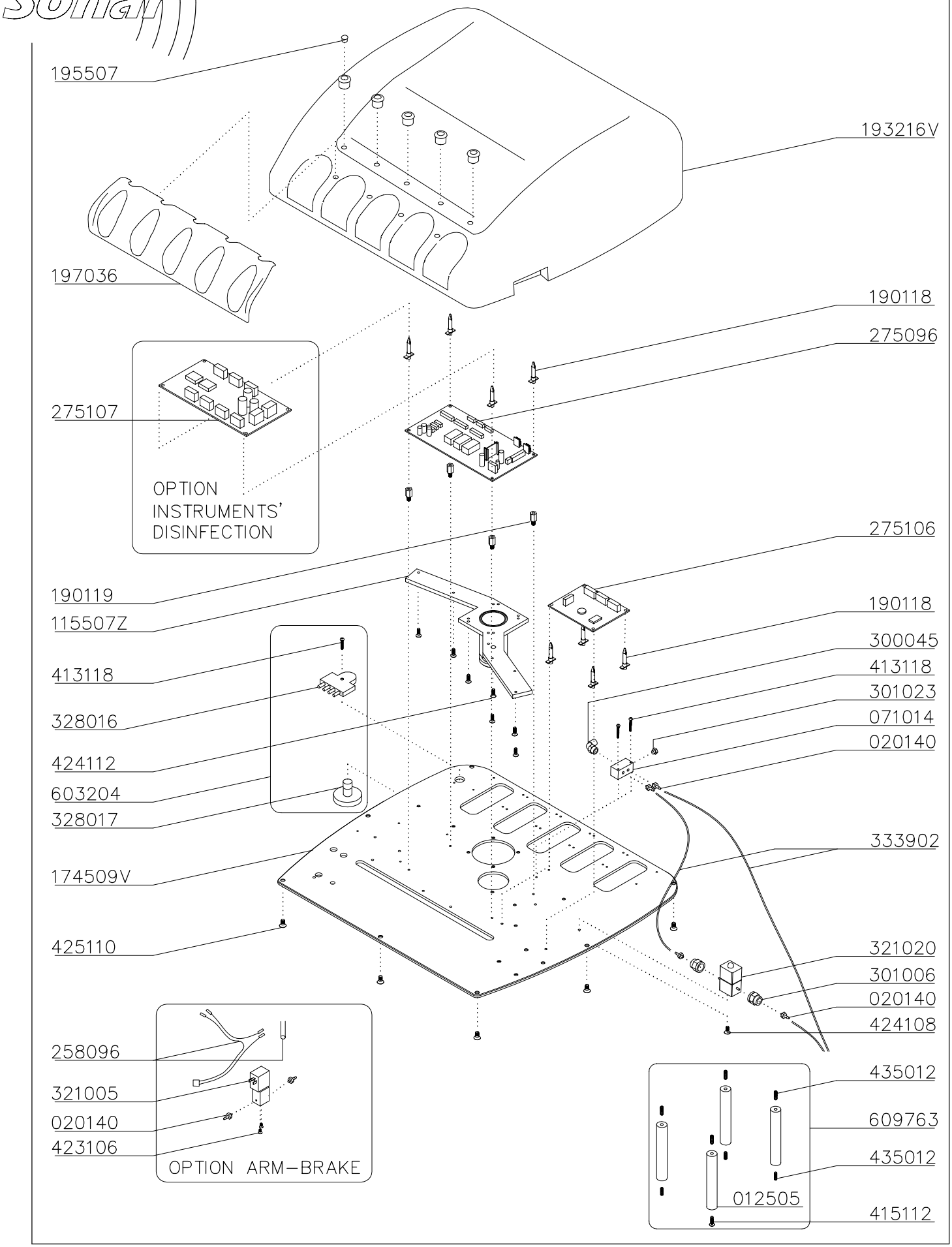
195507
193216V
197036
190118
275096
275107
OPTION
INSTRUMENTS'
DISINFECTION
275106
190119
115507Z
190118
300045
413118
413118
301023
328016
071014
424112
020140
603204
328017
333902
174509V
425110
321020
301006
020140
424108
258096
321005
020140
423106
OPTION ARM-BRAKE
435012
609763
435012
012505
415112

BACK

Sonar

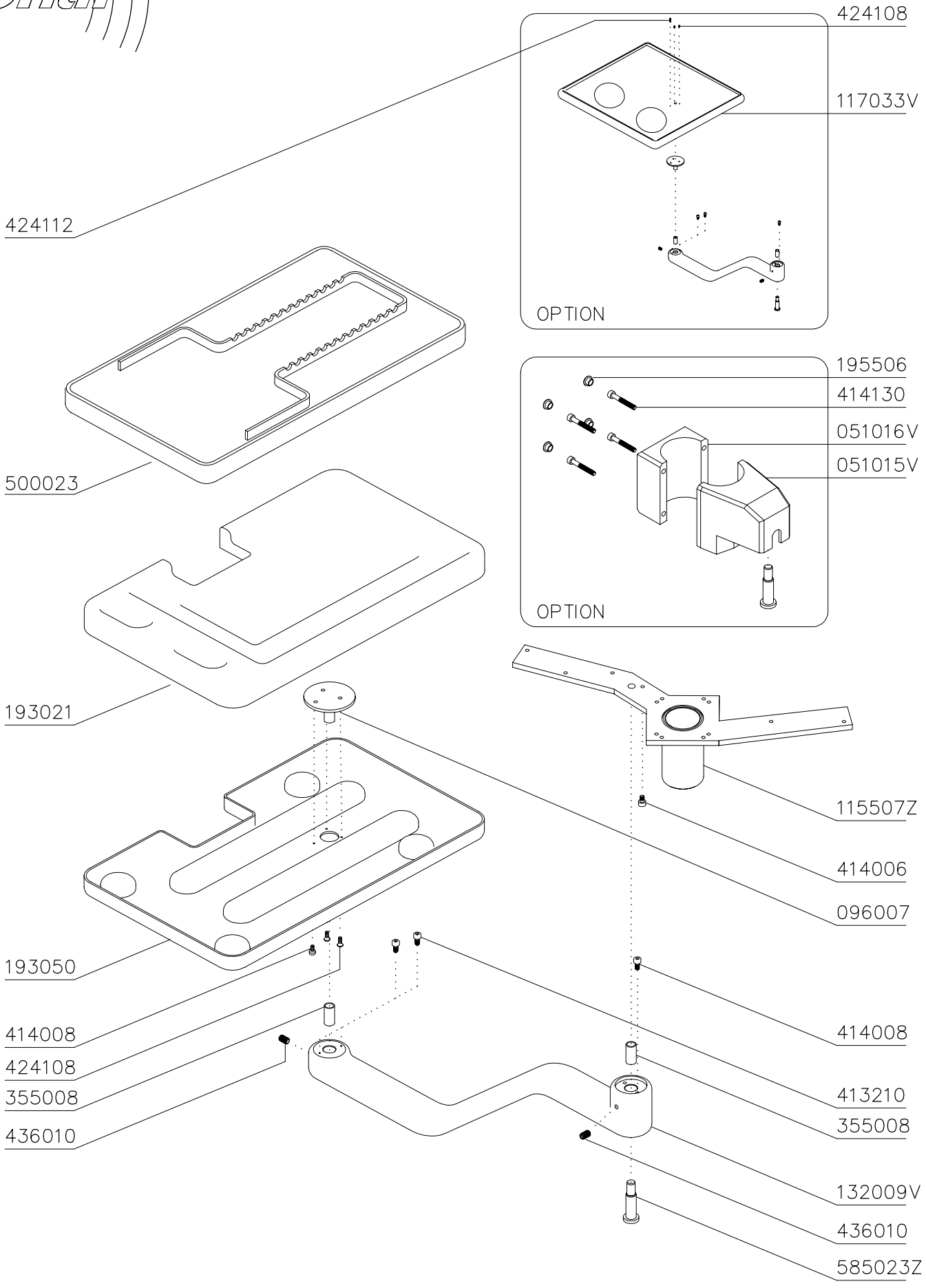

cemm bologna

Porta-Tray

Tray–Holder

Tav/Dwg 06_03

Sonar

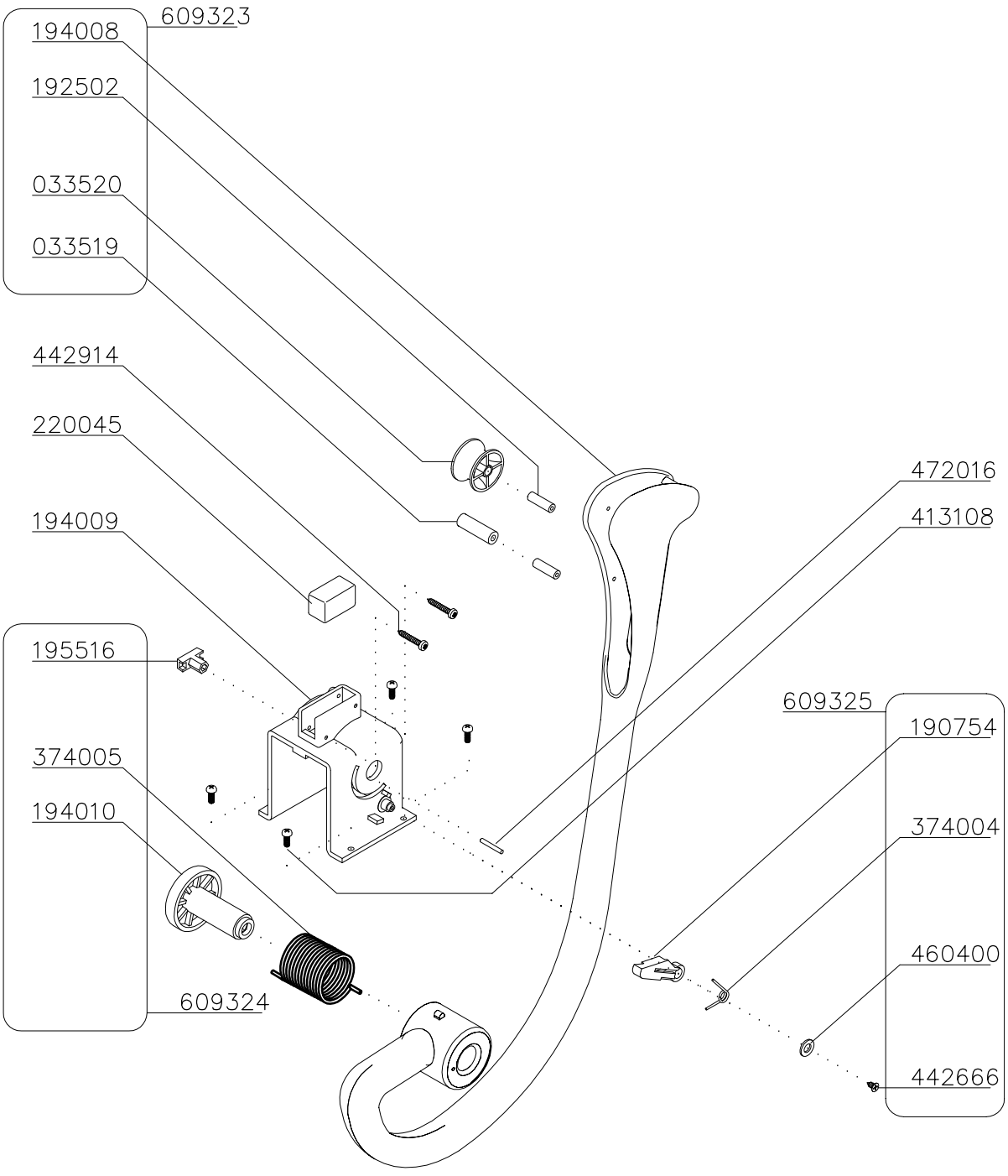
609323
194008
192502
033520
033519
442914
220045
194009
195516
374005
194010
609324
472016
413108
609325
190754
374004
460400
442666

Sonar

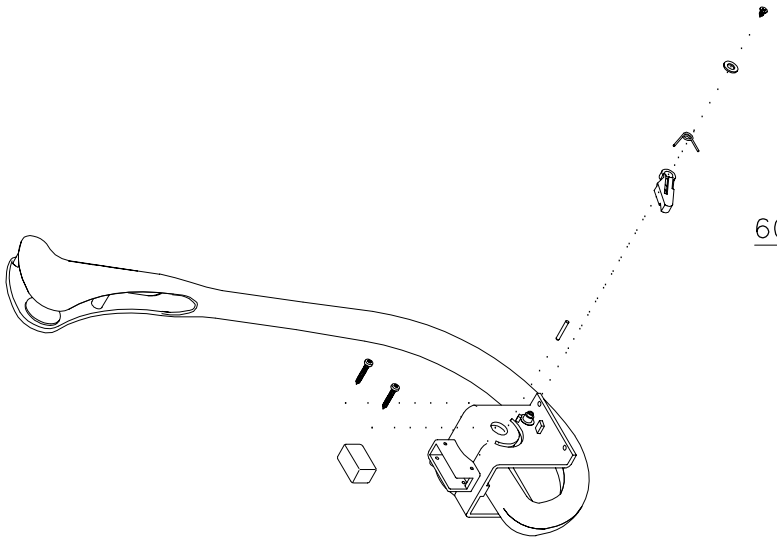

609322

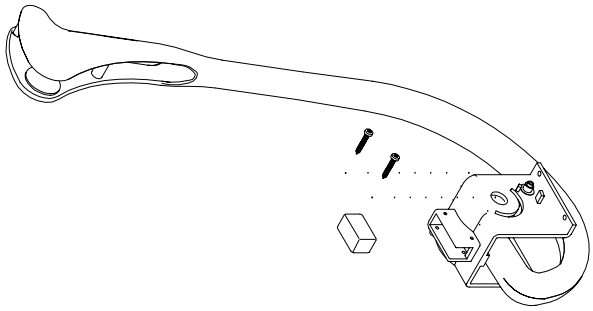

609316

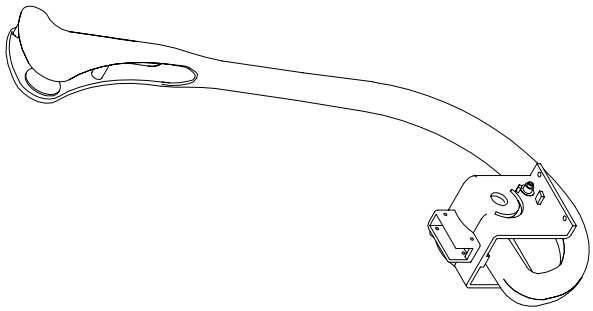

609319

BACK

cemm bologna

Braccetto strumenti (completo)

Instrument–arm (complete view)

Tav/Dwg 06_05

Sonar

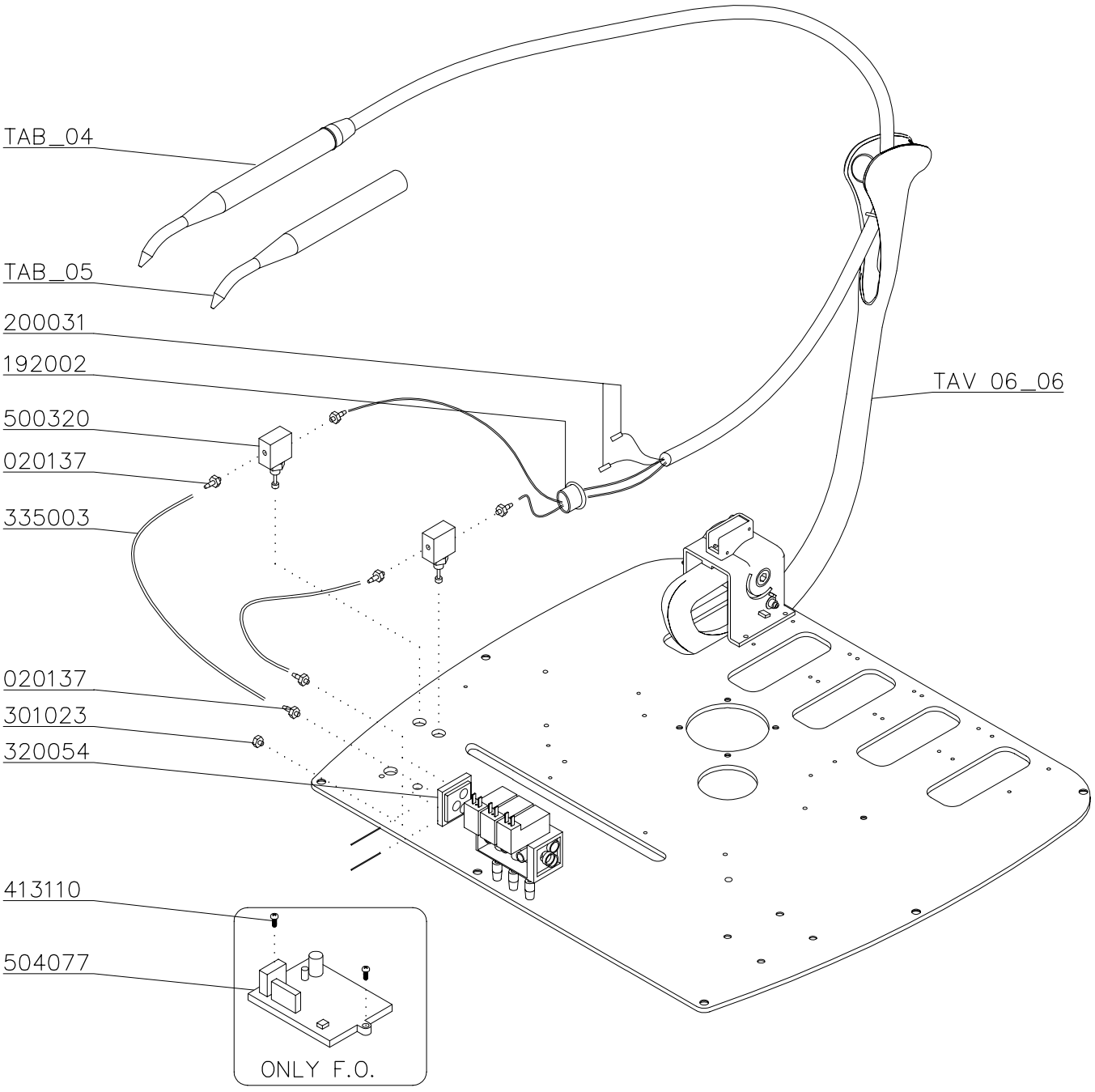

TAB_04 – COMPLETE HOSE	
504073	MINILIGHT 6F F.O.
504078	MINIMATE 3F INOX
504068	MINILIGHT 3F
504067	MINILIGHT 6F
504081	FARO 3F

TAB_05 – AUTOCLAVABLE PARTS	
504609	MINIMATE INOX – STRAIGHT
504610	MINIMATE INOX – CURVED
504606	MINILIGHT INOX – STRAIGHT
504601	MINILIGHT – STRAIGHT
504602	MINILIGHT – CURVED
504608	MINILIGHT INOX – CURVED

Sonar

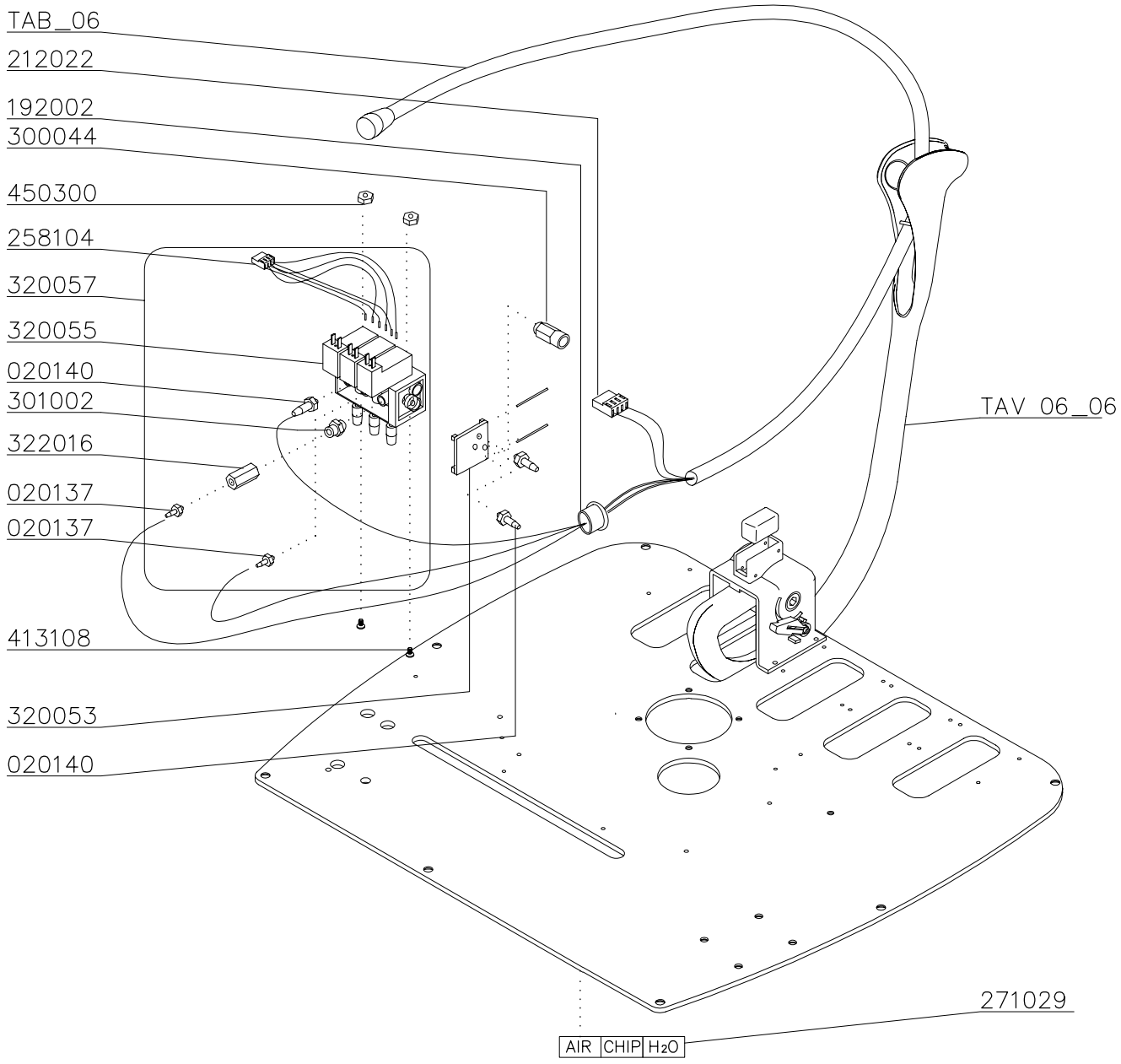

TAB_06 – HOSE	
505041	MIDWEST
505040	MIDWEST F.O.
505035	BORDEN

Sonar

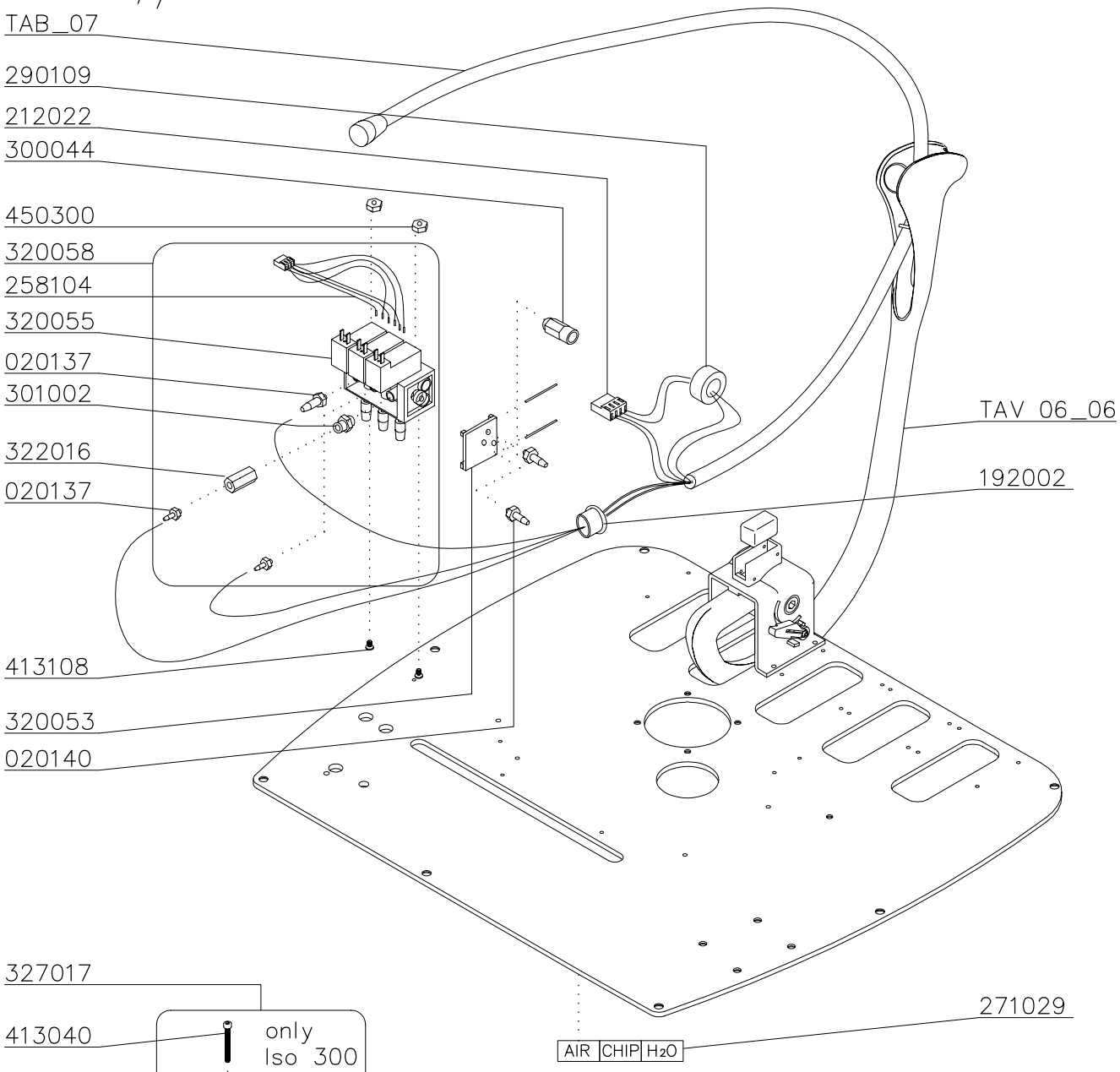

TAB_07 – HOSE	
505055	MM MC3 Turning
505054	MM MC3 Fixed
505051	MM MC ISOLITE Fixed
505050	MM UNICA FARO
505033	MM MC ISOLITE Turning
505032	MM MC2
505519	MM SATELEC

BACK

Sonar

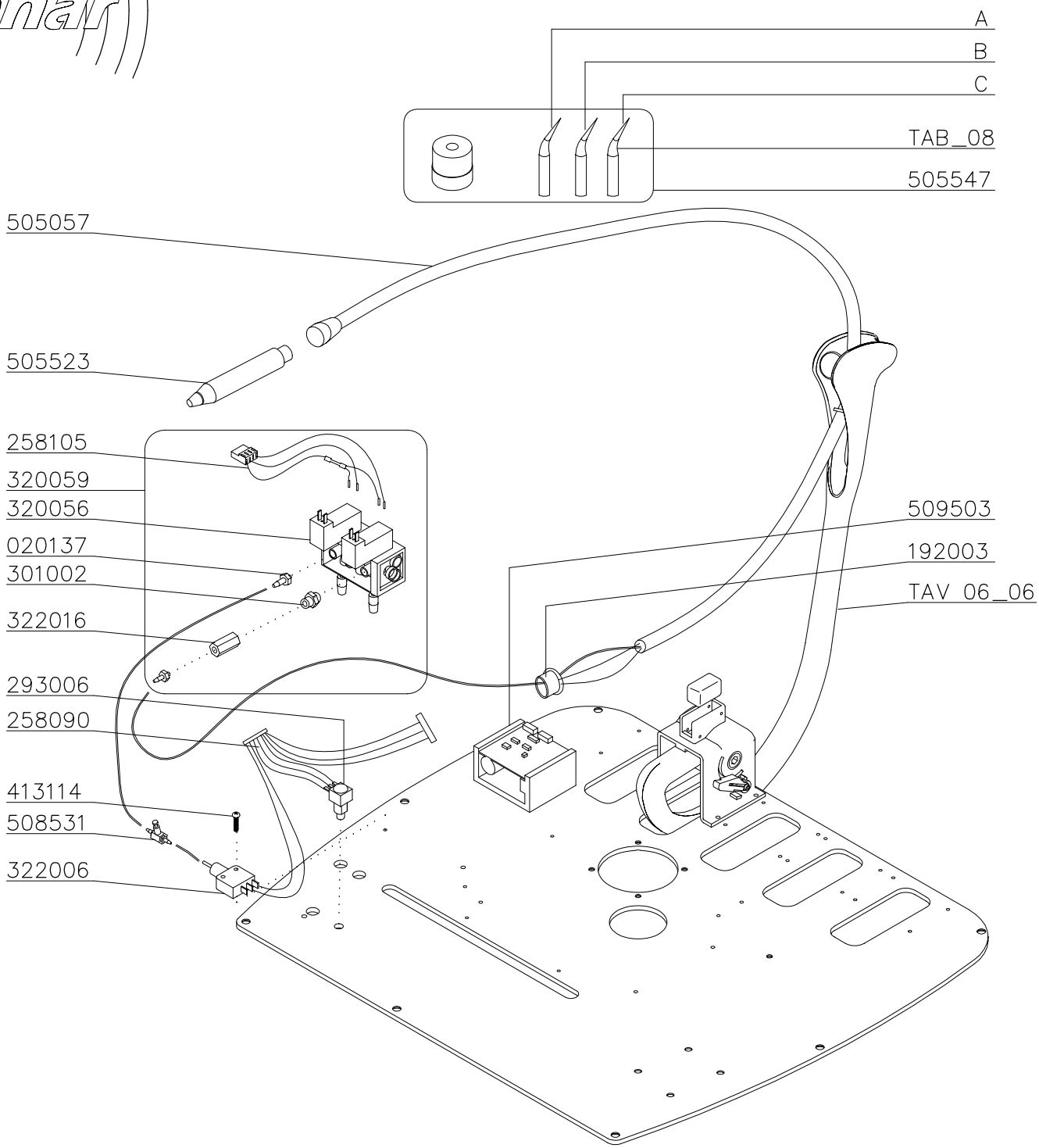

TAB_08 – TIPS	
A	505524
B	505525
C	505526

BACK

Sonar

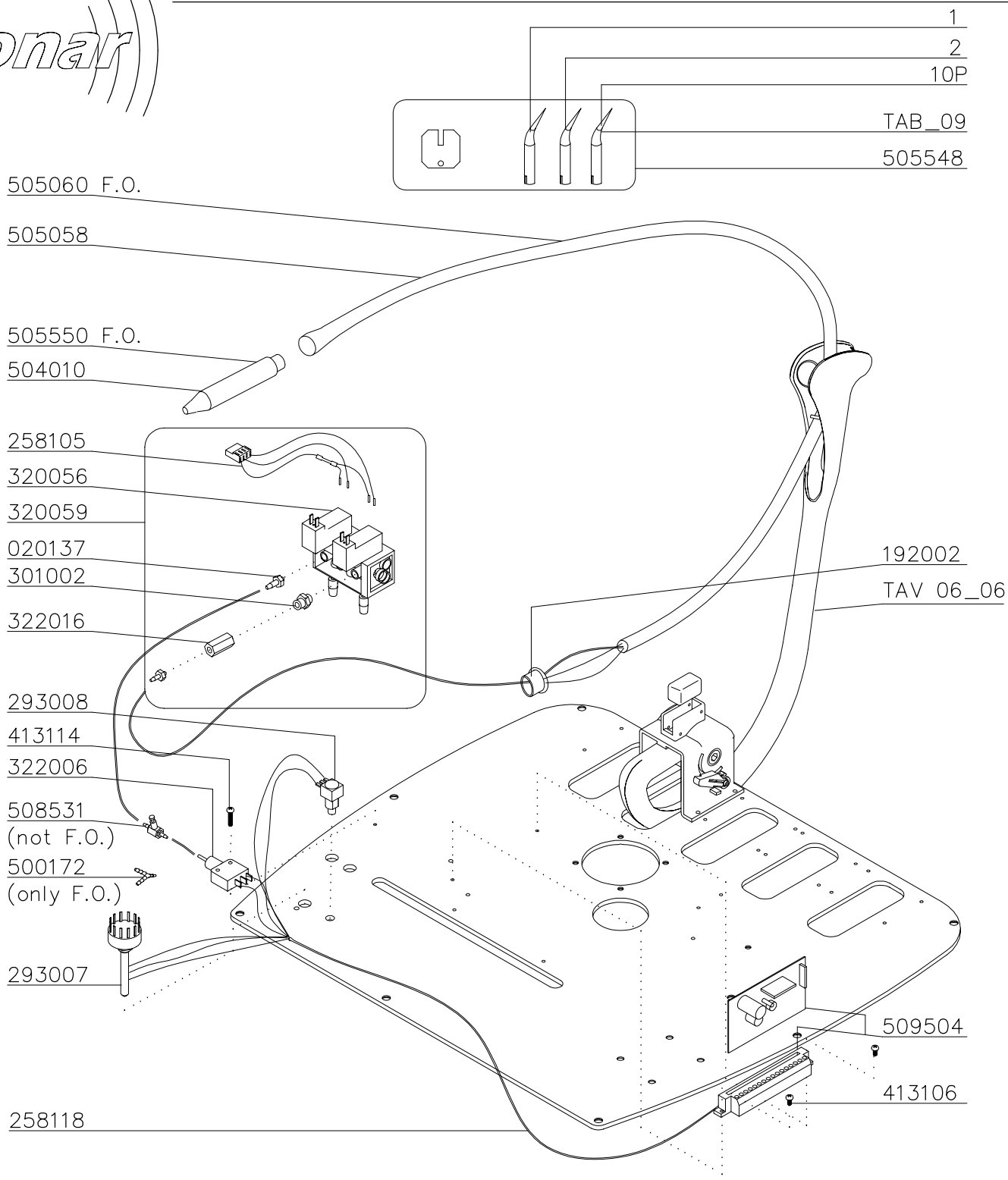

TAB_09 – TIPS	
1	500276
2	500277
3	500278
5	500298
6	500299
10P	505509

BACK

Sonar

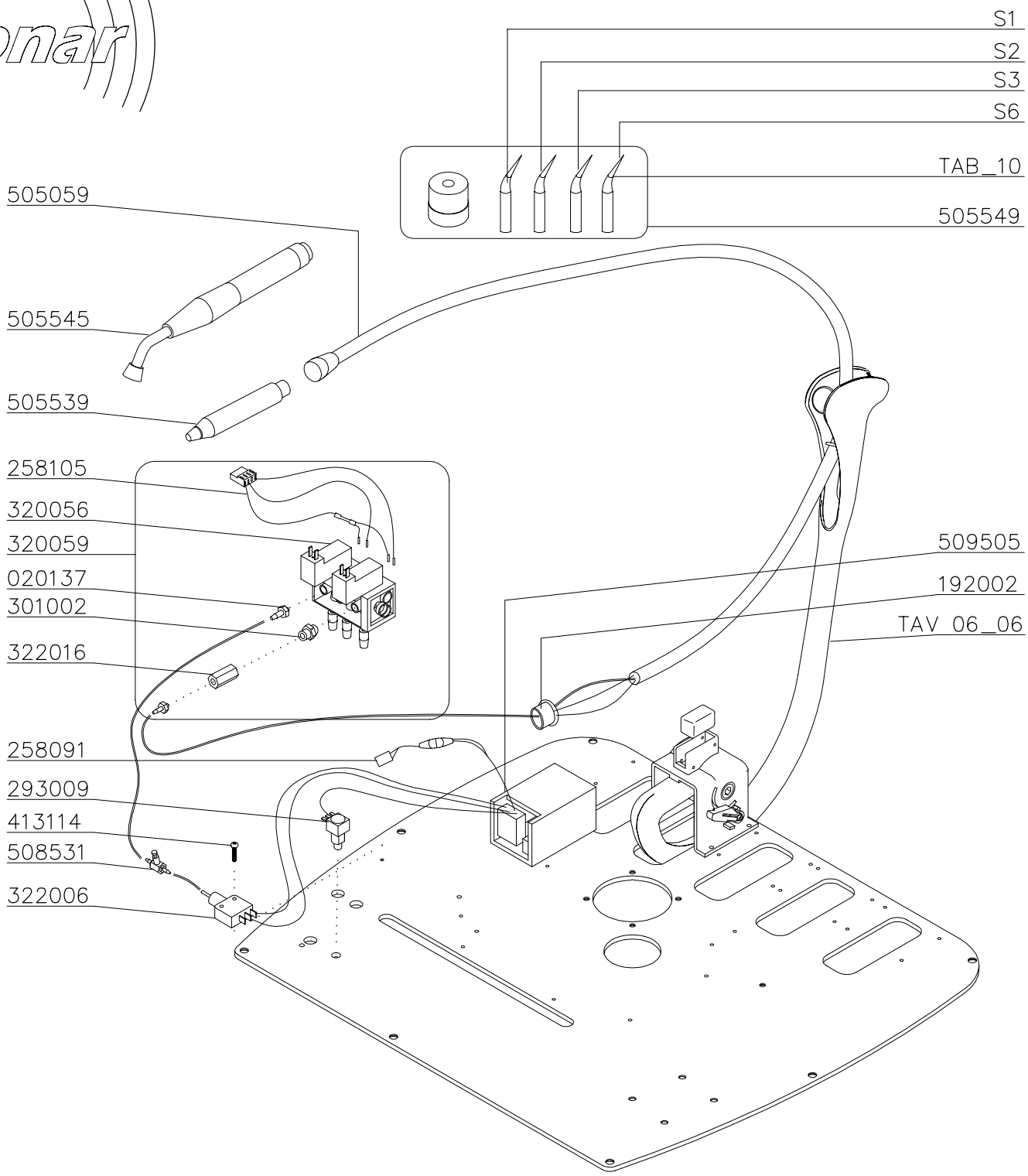

TAB_10 – TIPS	
S1	505541
S2	505542
S3	505543
S6	505544

BACK

Sonar

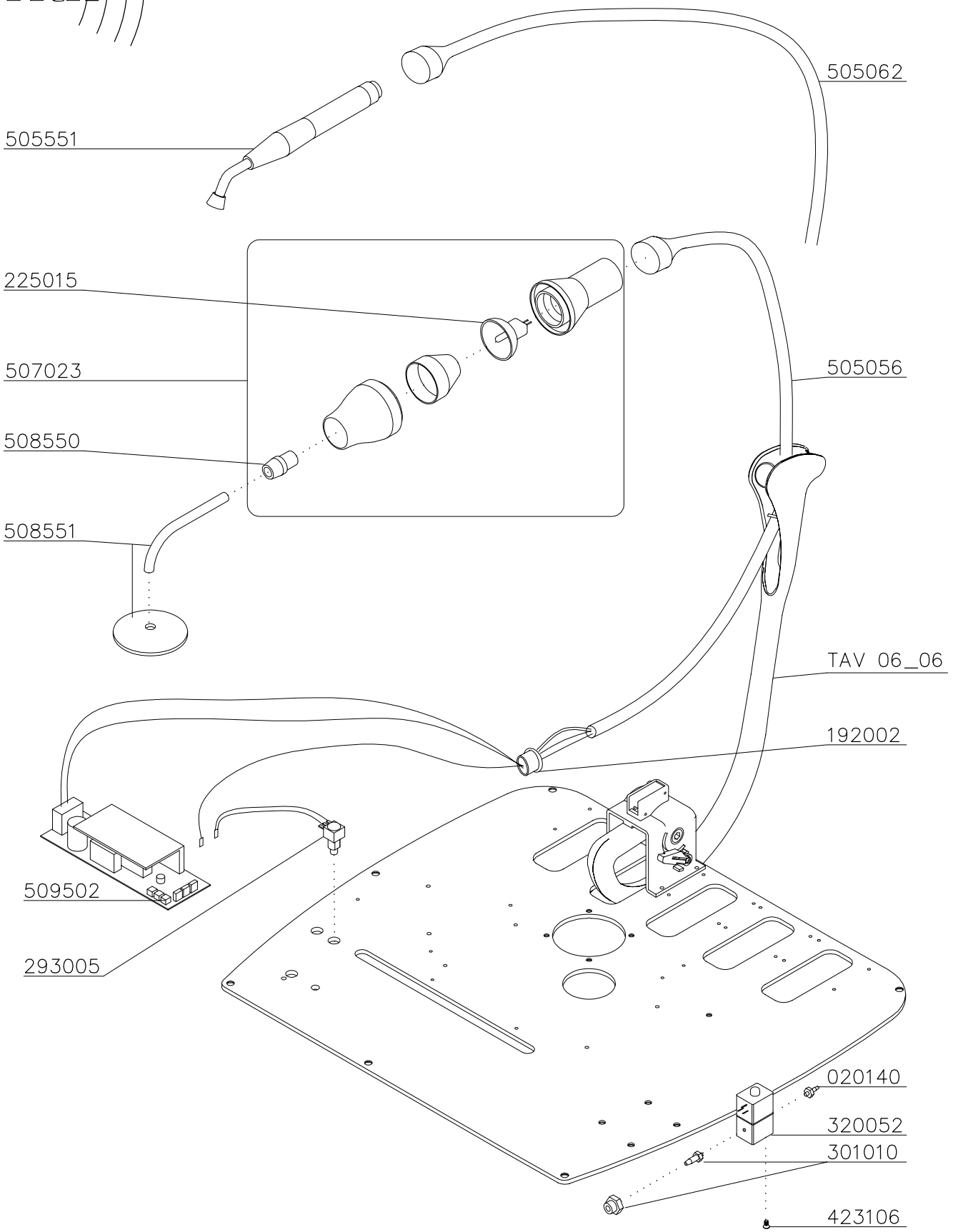

cemm bologna

Lampada polimerizzatrice Faro e Mectron

Polymerisation light Faro & Mectron

Tav/Dwg 07_07

BACK

Sonar

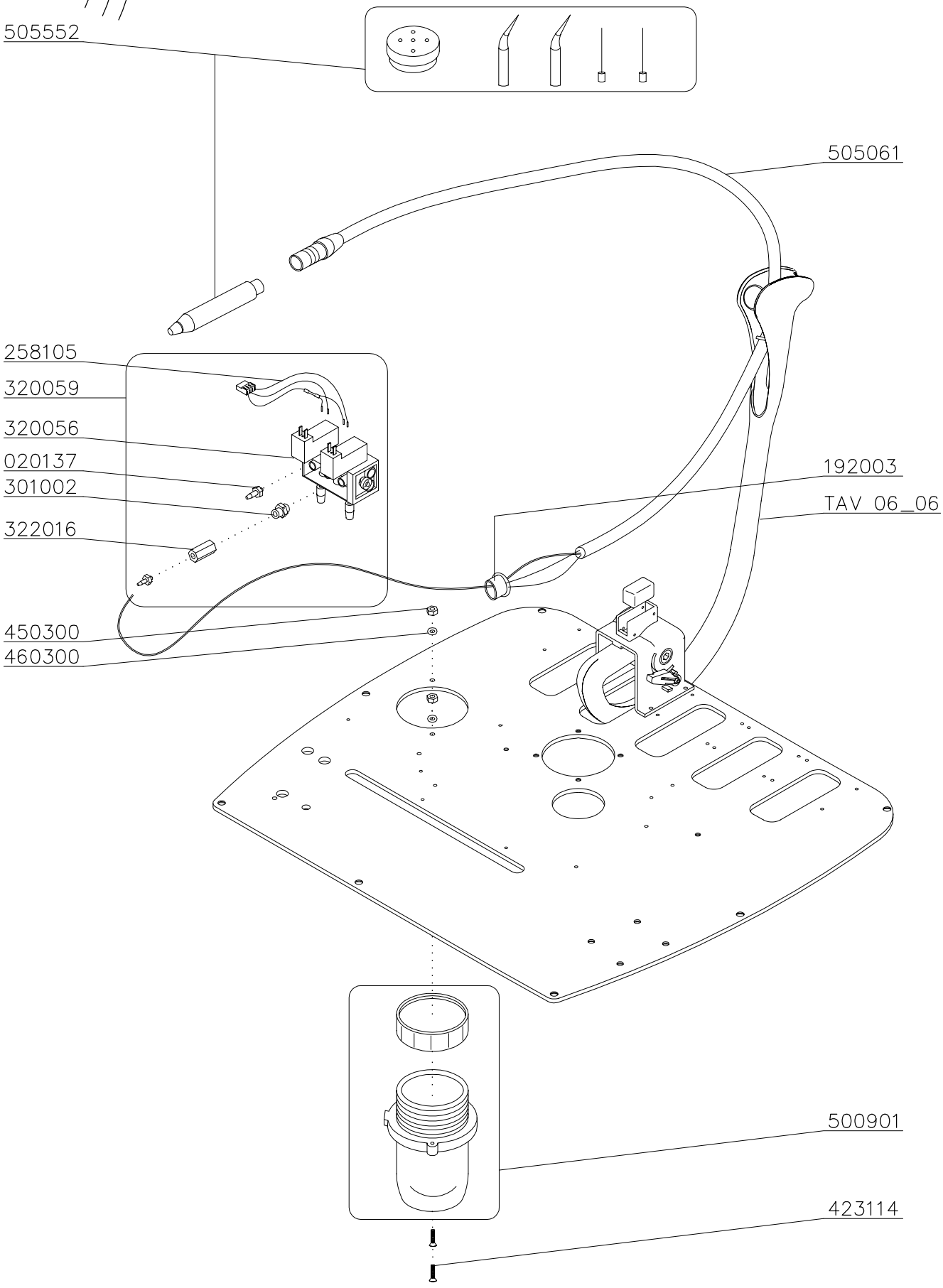

cemm bologna

Kit Pulitore Bicarbonato E.M.S.

Kit Powder Cleaner E.M.S.

Tav/Dwg 07_08

BACK

Sonar

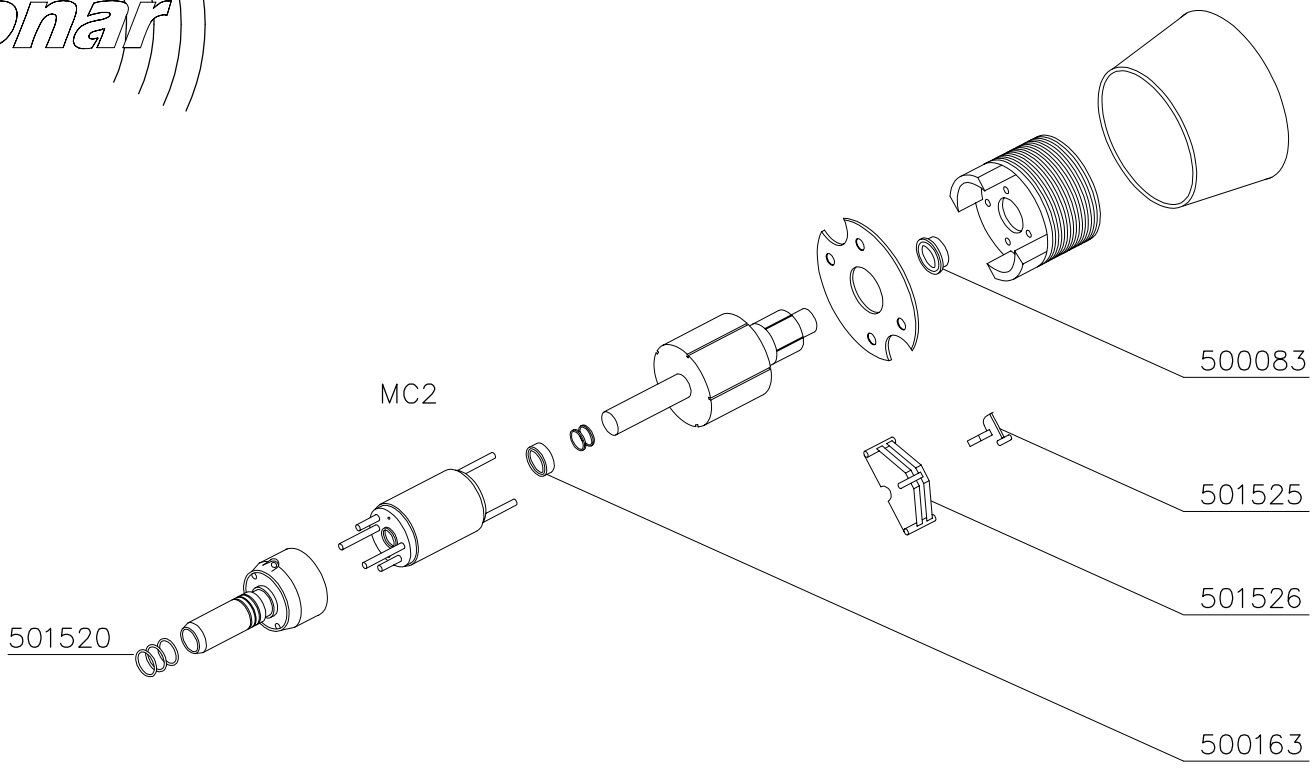
MC2
500083
501525
501526
501520
500163

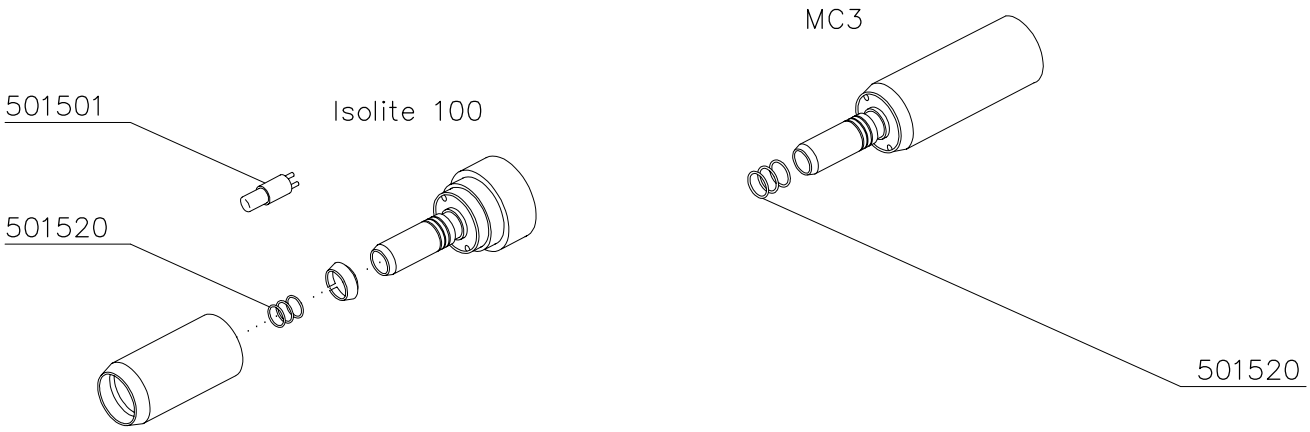
501501
Isolite 100
501520
MC3
501520

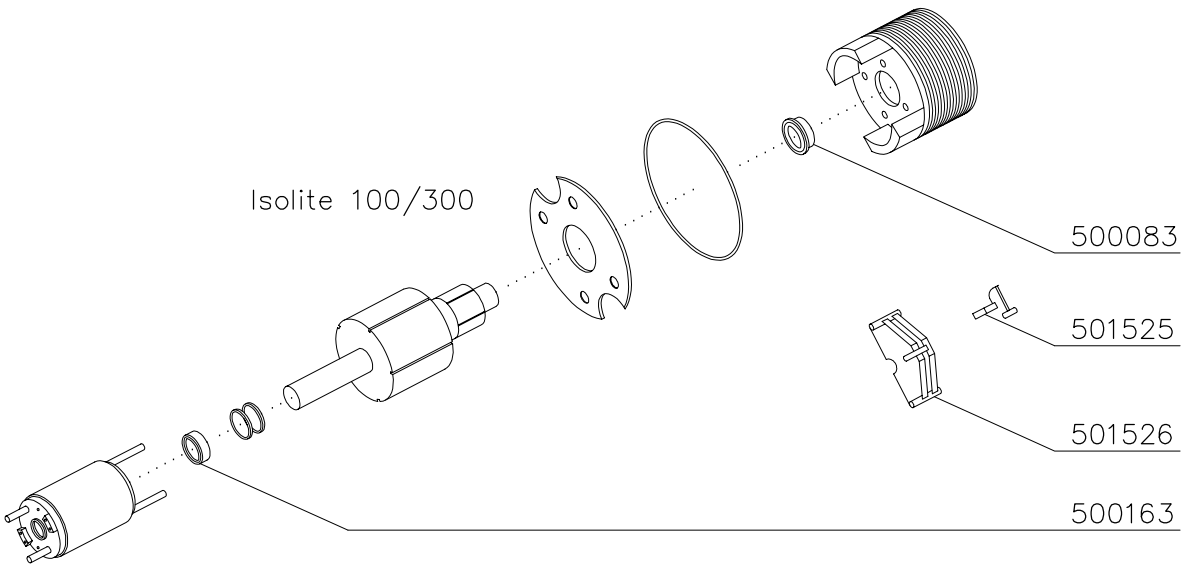
Isolite 100/300
500083
501525
501526
500163

Sonar

Black Pearl

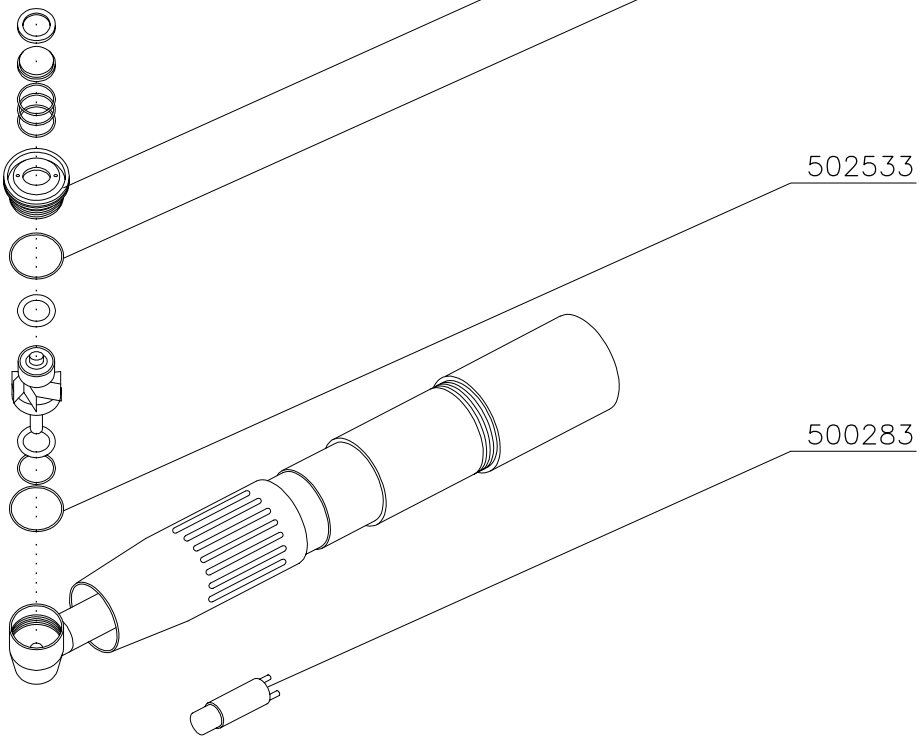

Ondine

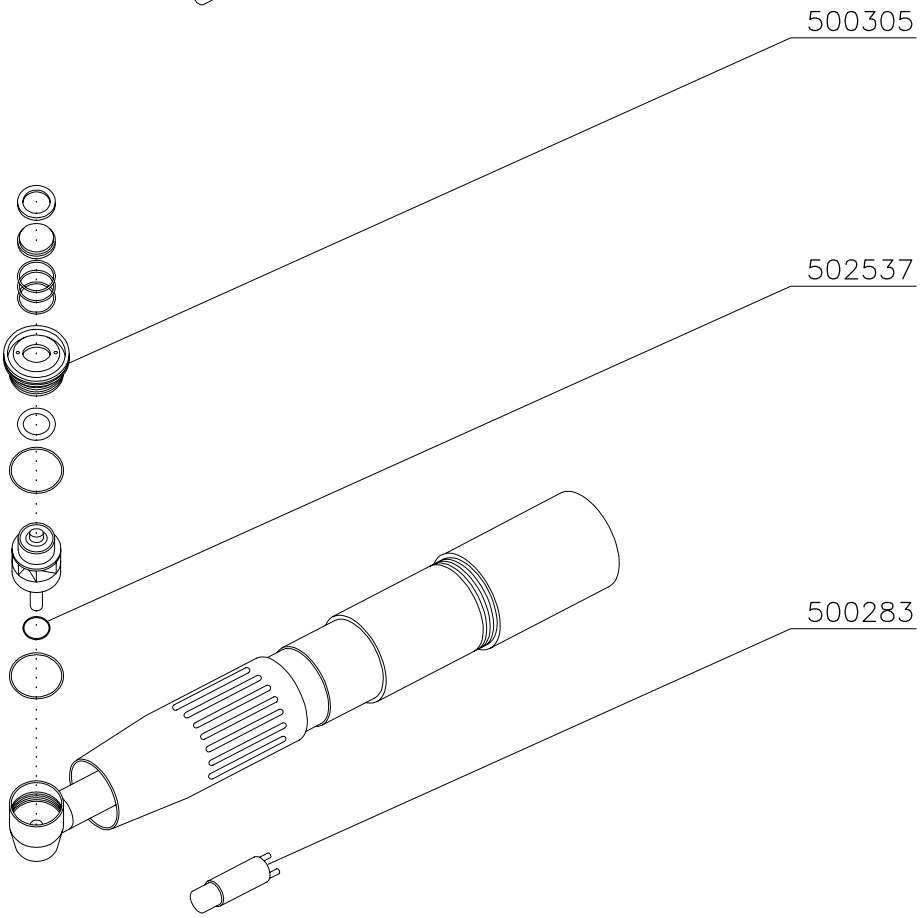

Sonar

504536

504615

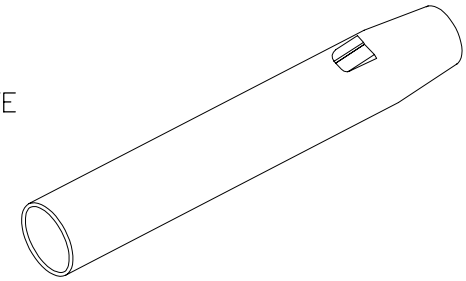

MINIMATE

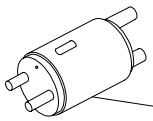

504612

504536

504548
PLASTIC

504611
INOX

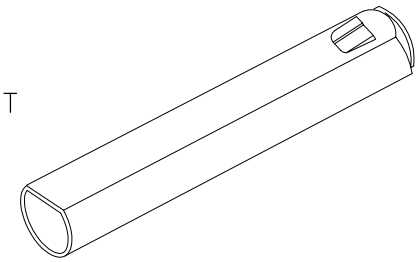

MINILIGHT

504604

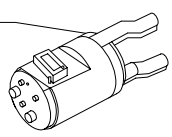

Sonar

501009

Unifix 3V Borden

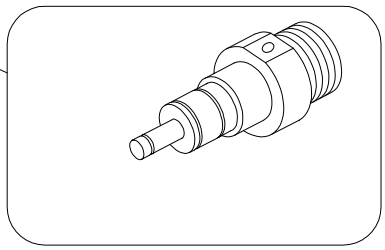

501034

501512 F.O.

Unifix 4V Midwest

501518

501517

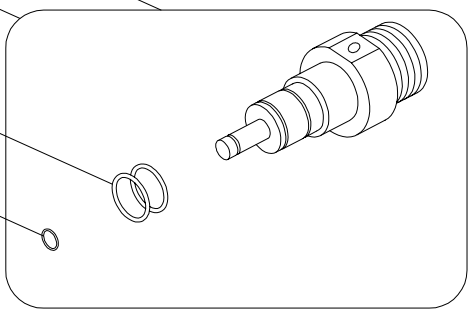

501519

Adapter Midwest–Borden

500069

500090

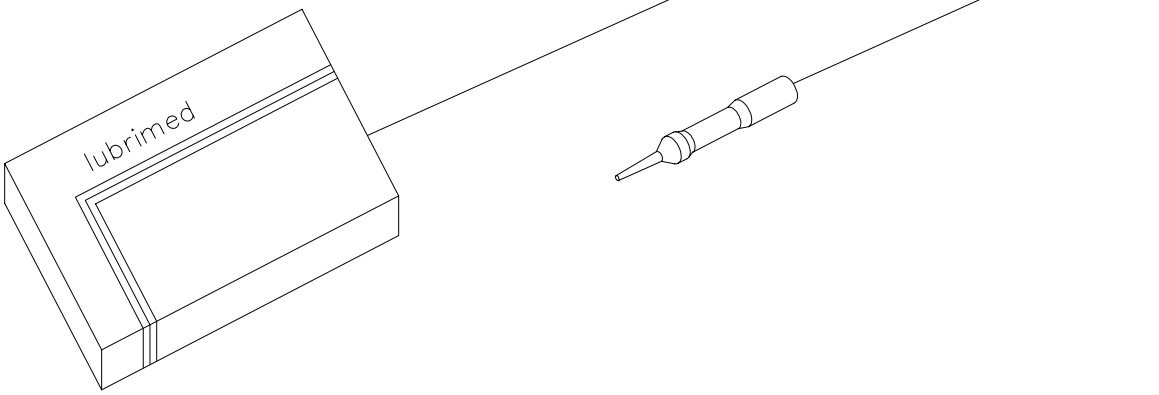

BACK

Sonar

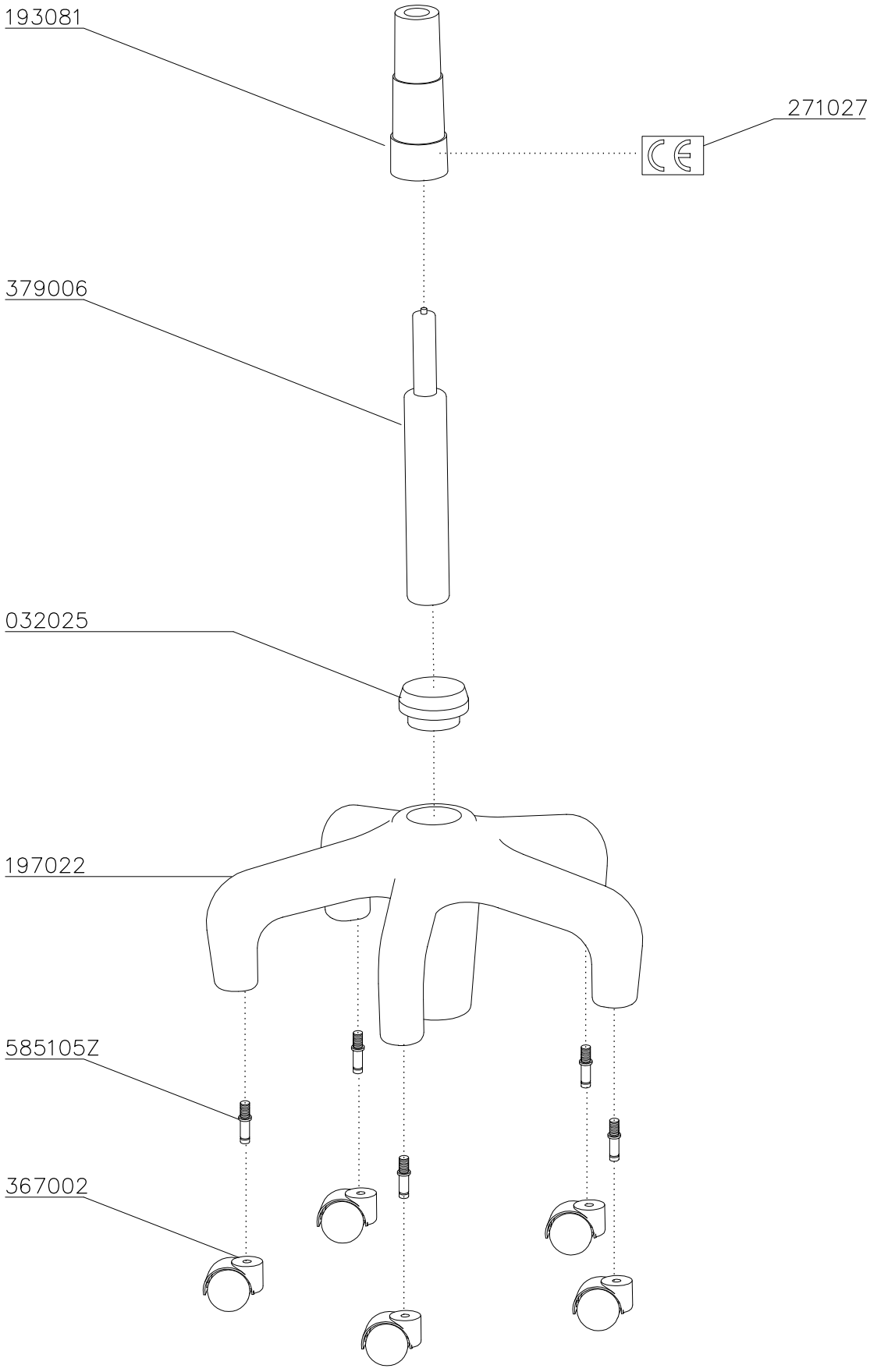

cemm bologna

Base - Modello Spider

Base – Spider model

Tav/Dwg 09_01

BACK

Sonar

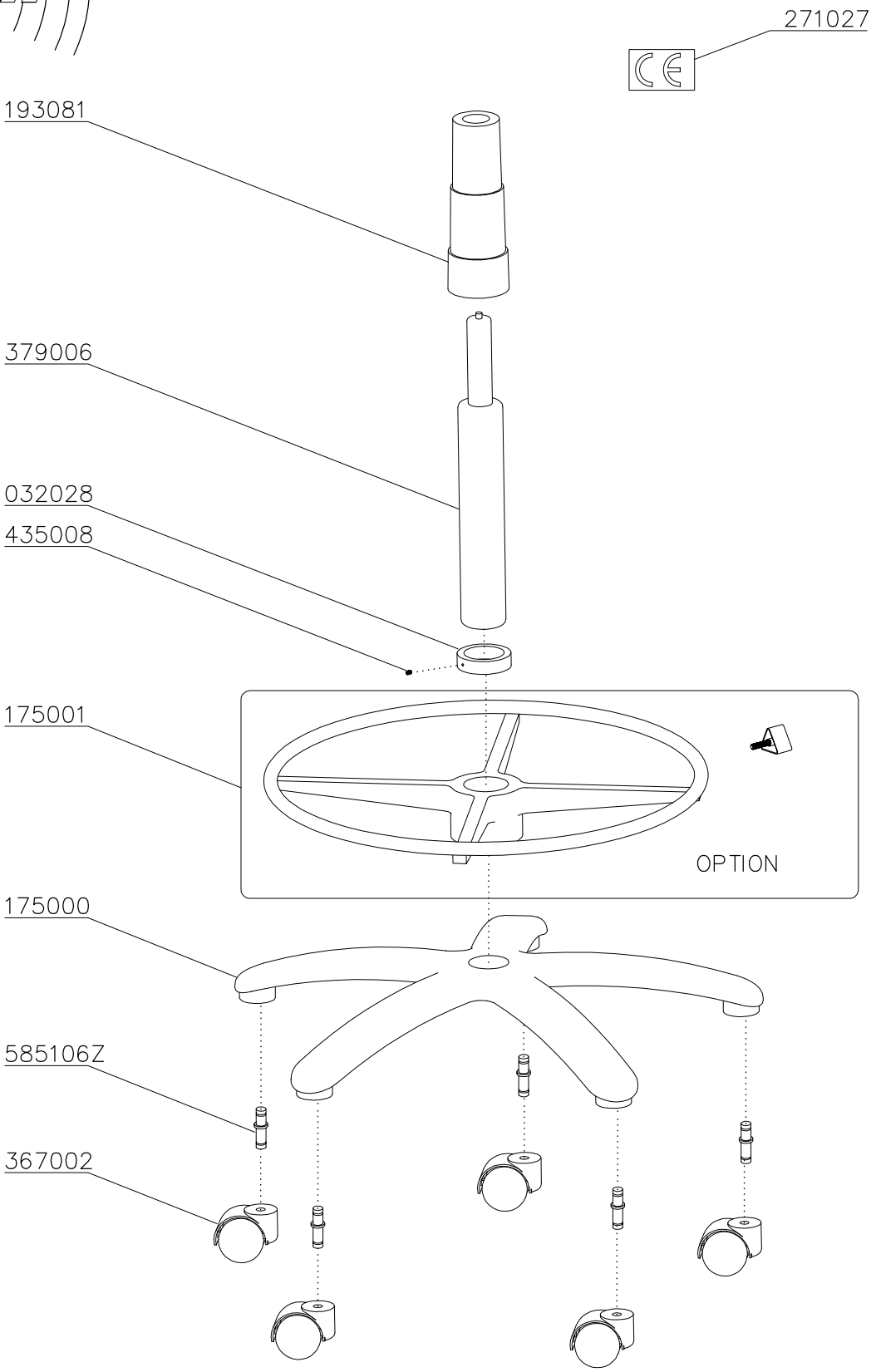

cemm bologna

Base - Modello Andy

Base – Andy model

Tav 09_02

BACK

Sonar

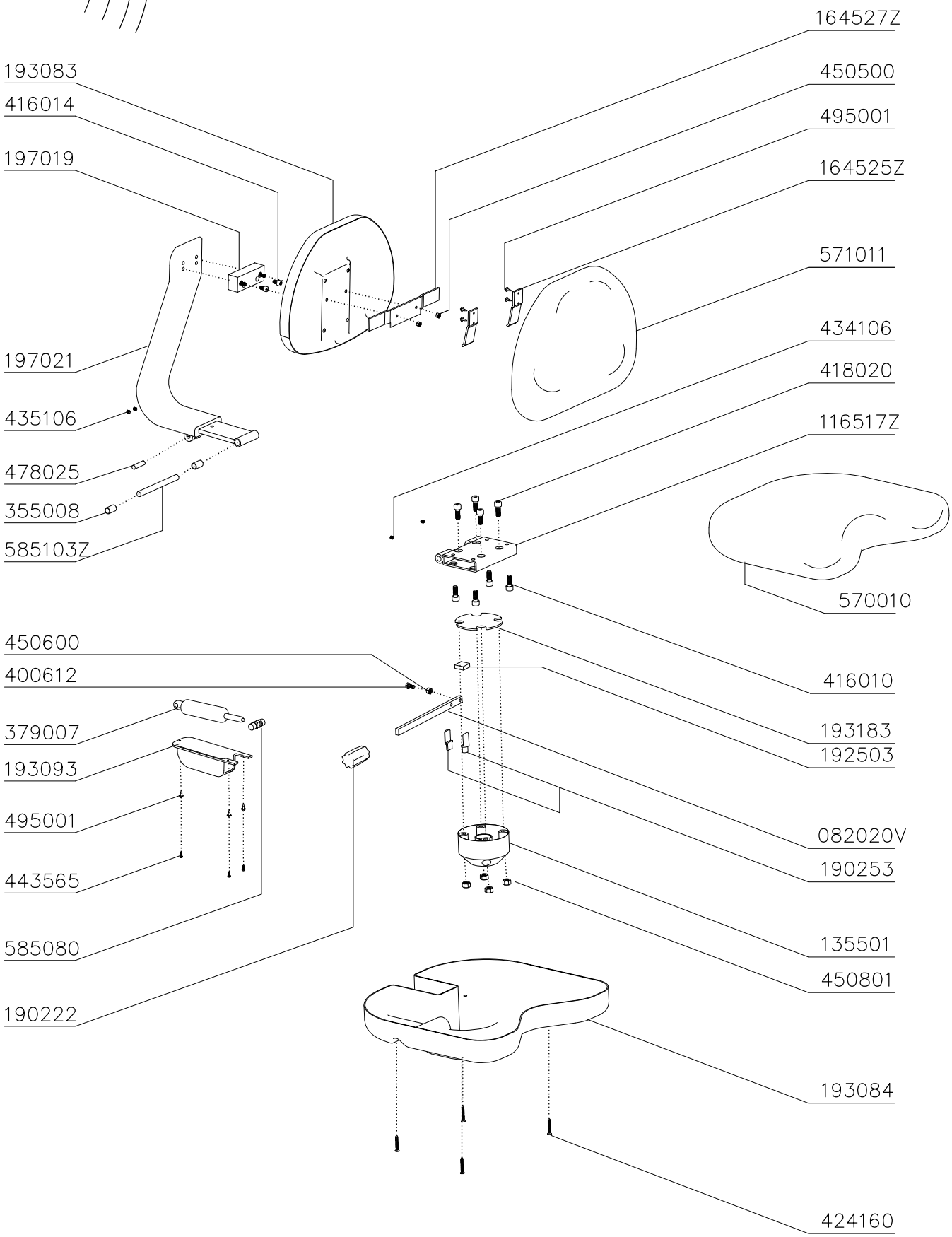

cemm bologna

Schienale - Versione OP

Backrest — Version OP

Tav/Dwg 09_03

Sonar

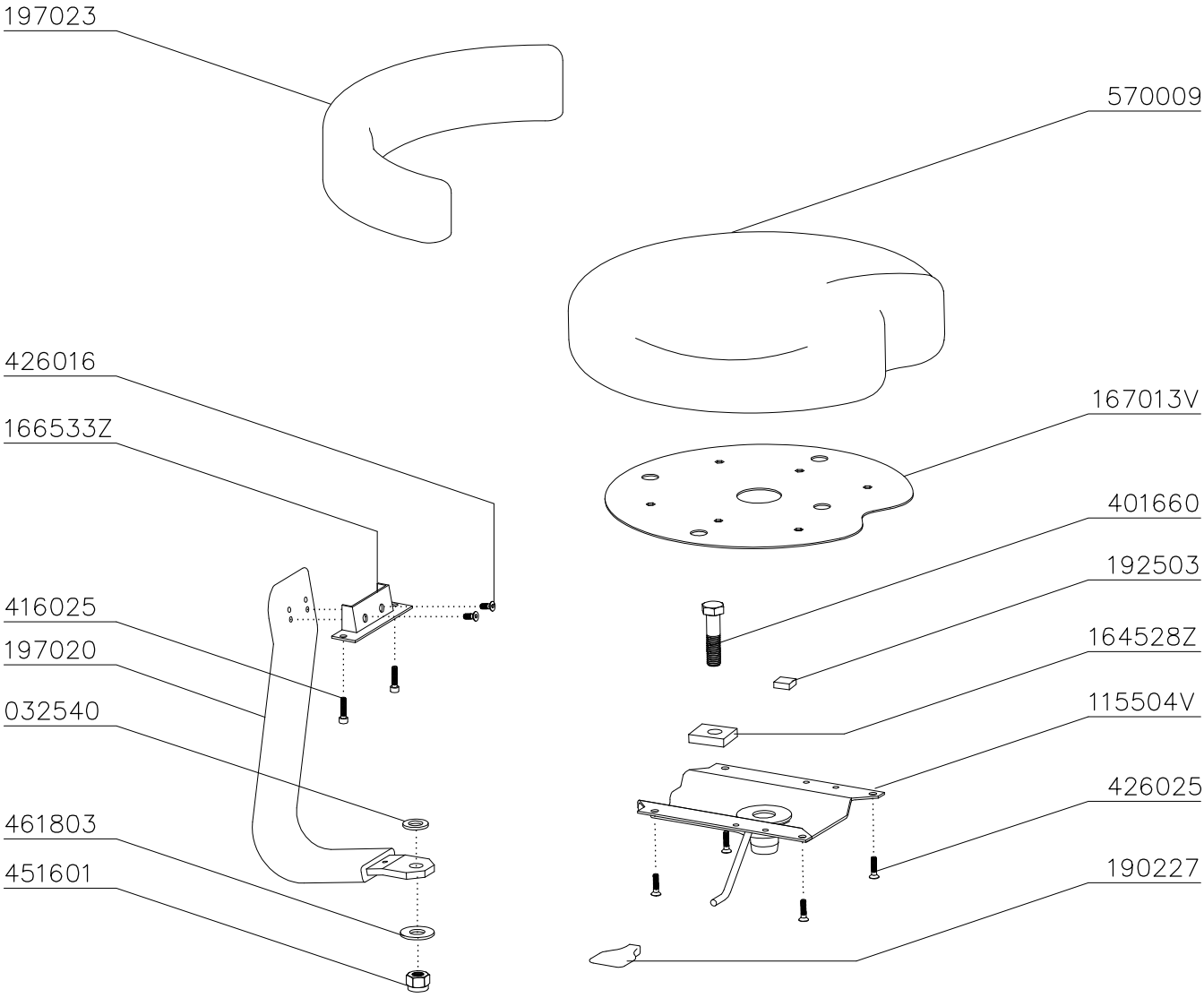
197023
570009
426016
166533Z
167013V
401660
192503
416025
197020
164528Z
115504V
032540
426025
461803
190227
451601

BACK

Sonar

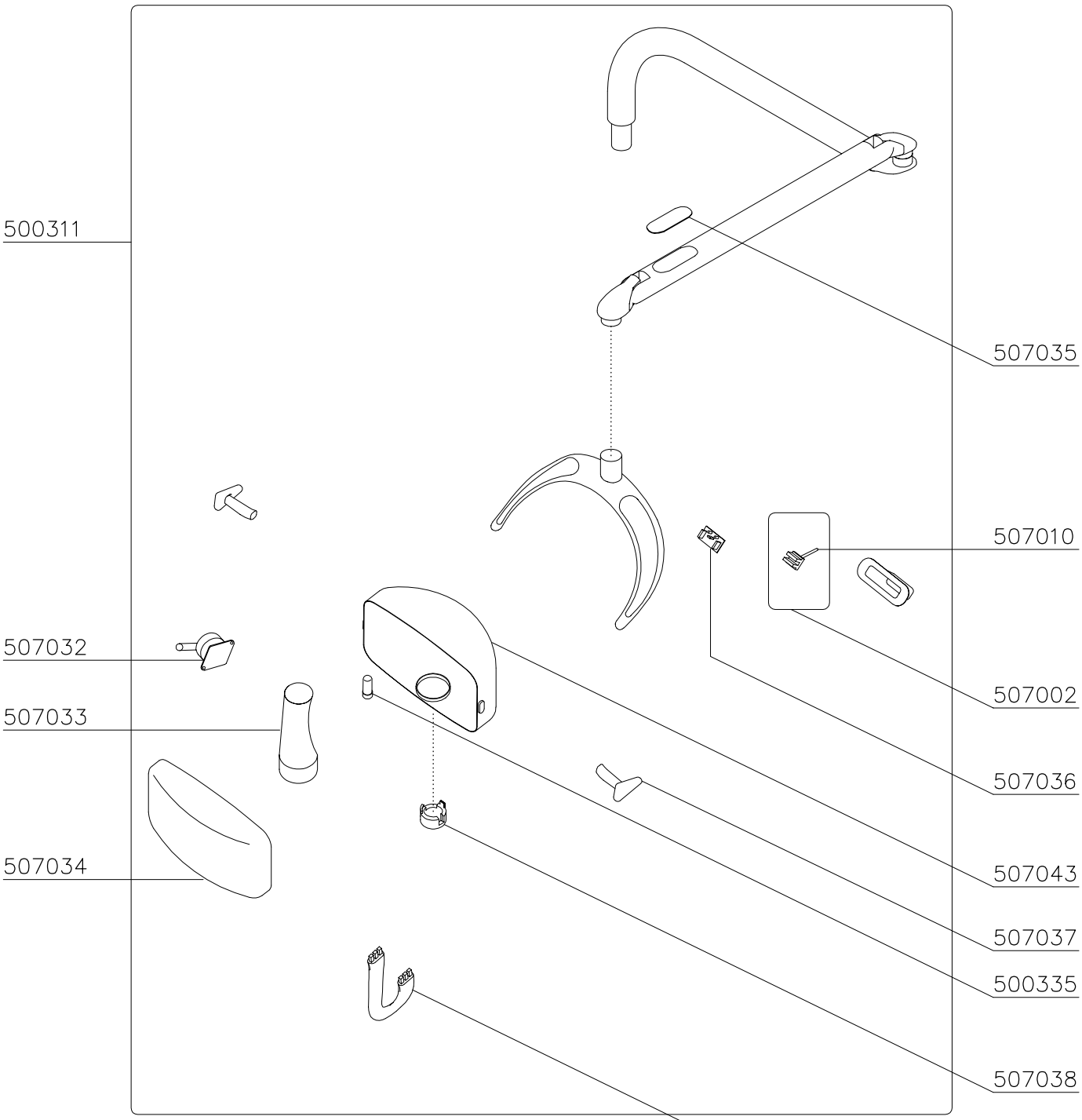

cemm bologna

Lampada EDI

Operating–light EDI

Tav/Dwg 10_01

Sonar

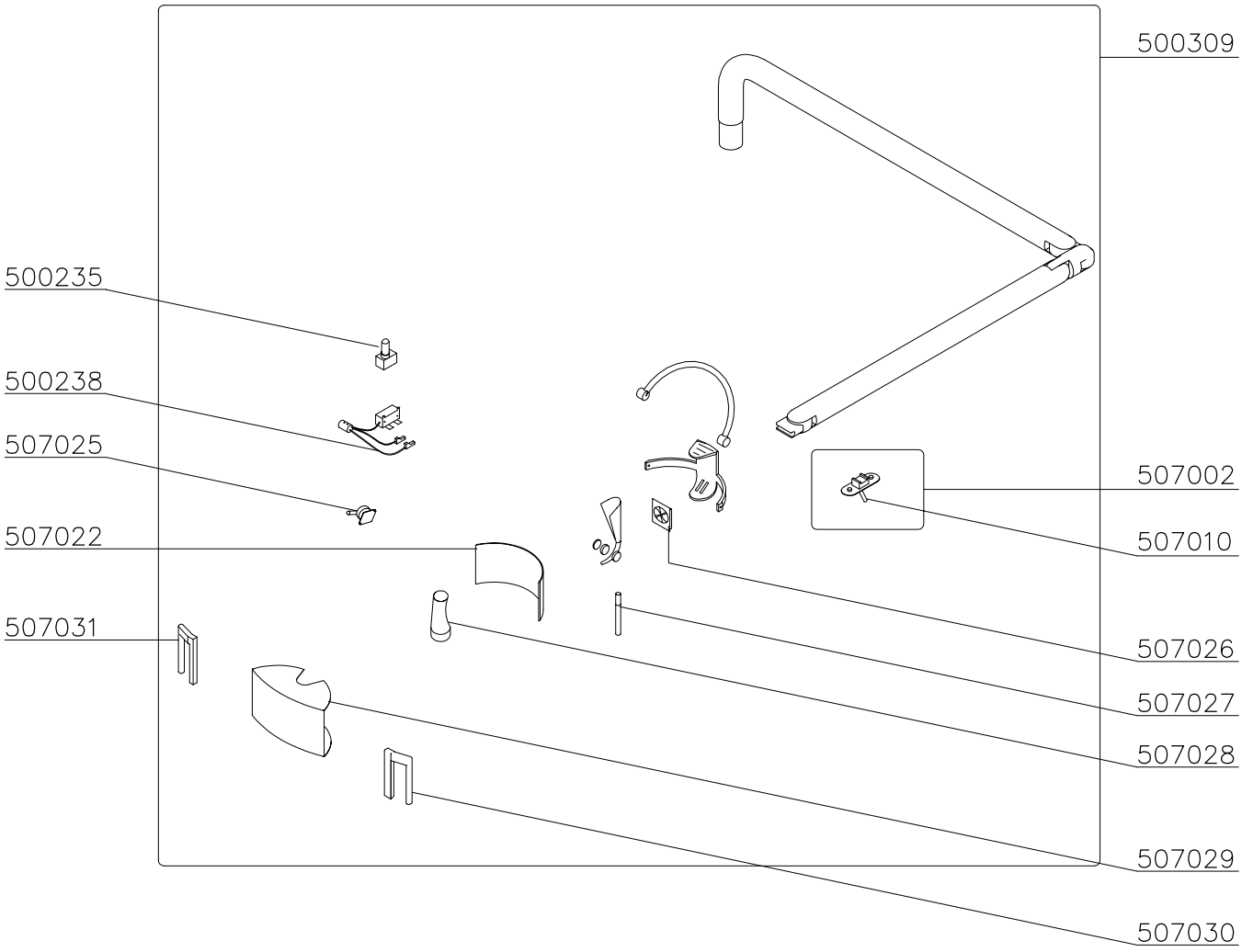
500309
500235
500238
507025
507022
507031
507002
507010
507026
507027
507028
507029
507030

Sonar

Code	Da / *From*		A / *To*	
	Scheda / *Card*	Connettore / *Connector*	Scheda / *Card*	Connettore / *Connector*
258054	275085	CN6	275078	JP3
258062	275096	JP27	275086	CN35
258064	275096	JP12 / JP14	275086	CN36
258064	275096	JP24	275086	CN38
258064	275096	JP14	275086	CN41
258065	275096	JP10	275086	CN26
258066	275085	CN7	275086	CN32
258066	275085	CN8	275086	CN37
258066	275085	CN40	Micro sic. assistente/*Nurse's microswitch*	
258067	275086	CN31	E.V. quadrupla / *E.V. 4way*	
258068	275086	CN25	275087	CN17
258069	275085	CN4	275087	CN23
258070	275087	CN22	E.V. generali / *Main EV*	
258071	275086	CN28	273028	
258073	275086	CN10	Micro sic. poltrona / *Chair microswitch*	
258073	275085	CN13	Micro sic. schienale/*Backrest microswitch*	
258079	275085	CN12	Micro sic. pedana/*Chair base microswitch*	
258080	275096	JP11	Negativoscopio / *X-ray viewer*	
258082	275085	CN5	Deviatore bipolare / *Bipolar Deviator*	
258083	275086	CN30	Lampada operatoria / *Operating-light*	
258084	275087	CN18	Interruttore generale / *Unit main Switch*	
258089	275096	JP15 / JP26	Micro strum./*Micro switch of instruments*	
258103	Rete / *Mains*		Interruttore generale / *Unit main Switch*	
258129	275106	JP1 / JP3	273034	
258130	275096	JP22	275106	JP2

Sonar

Codice	Descrizione
258054	Cablaggio per pedale con microprocessore
258062	Cavo trasmissione da scheda strumenti a scheda riunito
258064	Cavo da scheda strumenti a scheda riunito
258065	Cavo potenza da scheda strumenti a scheda riunito
258066	Cavo da scheda riunito a scheda poltrona
258067	Cavo da scheda riunito a E.V. bacinella
258068	Cavo potenza da scheda riunito a scheda alimentazione
258069	Cavo da scheda poltrona a scheda alimentazione
258070	Cavo da scheda alimentazione a E.V. generali
258071	Cavo da pannello comandi assistente a scheda riunito
258073	Cavo micro poltrona
258079	Cavo micro pedana
258080	Cavo negativoscopio
258082	Cavo interruttore salita–discesa poltrona
258083	Cavo lampada
258084	Cavo alimentazione da scheda alimentazione
258089	Cablaggio micro selezione strumenti
258103	Cavo alimentazione da rete
258129	Cavo prolunga pannello comandi
258130	Cavo interfaccia scheda tavoletta strumenti / scheda pannello comandi

Sonar

Code	Description
258054	Cable of Foot-control with Microprocessor
258062	Transmission Cable from Instruments' PCB to Unit PCB
258064	Cable from Instruments' PCB to Unit PCB
258065	Supply Cable from Instruments' PCB to Unit PCB
258066	Cable from Unit PCB to Chair PCB
258067	Cable from Unit PCB to Bowl-Rinse EVs
258068	Power Cable from Unit PCB to Supply PCB
258069	Cable from Chair PCB to Supply PCB
258070	Cable from Supply PCB to Main EVs
258071	Cable from Nurse's Keyboard to Unit PCB
258073	Cable of chair micro-switches
258079	Cable of Base micro-switches in chair base
258080	Cable of X-viewer
258082	Cable of Up/Down chair switch
258083	Cable of Unit-Mounted Light
258084	Supply Cable from Supply PCB
258089	Cable of instruments' selection micro-switches
258103	Supply cable
258129	Extension cable of Keyboard
258130	Interface cable from Delivery PCB to Keyboard PCB

ISO 9001 - EN 46001

www.cemm.it

CEMM - Dental chairs and units
Via Matteotti 27 - 40050 Villanova di Castenaso
Bologna - ITALY
Tel. +39.051.781.180 - +39.051.781.598
Fax +39.051.781.736
e-mail: cemm@cemm.it

974005-1, 01/05, ITA_ENG